JAR / BOTTLE

CH-J015G / GR

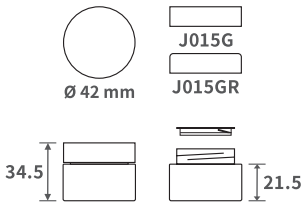

*Dimension:
Ø 42 mm x 34.5 mm
(cap 11.5 mm, base 21.5 mm)
*Capacity 15 ml / 0.528 oz
*Material:
Cap/AS+ABS
Inner cap/PP
Inner cover/PE
Base/PETG
Gasket/PE
*Description:
• Right angle cap/CH-J015G.
• Round angle cap/CH-J015GR.
• Base can be injected transparent or with color.

CH-J020G / GR

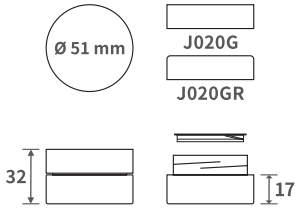

*Dimension:
Ø 51 mm x 32 mm
(cap 14 mm, base 17 mm)
*Capacity 20 ml / 0.704 oz
*Material:
Cap/AS+ABS
Inner cap/PP
Inner cover/PE
Base/PETG
Gasket/PE
*Description:
• Right angle cap/CH-J020G.
• Round angle cap/CH-J020GR.
• Base can be injected transparent or with color.

CH-J030G / GR

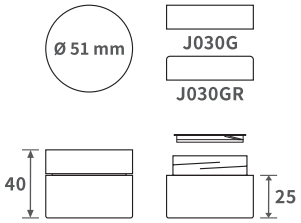

*Dimension:
Ø 51 mm x 40 mm
(cap 14 mm, base 25 mm)
*Capacity 30 ml / 1.056 oz
*Material:
Cap/AS+ABS
Inner cap/PP
Inner cover/PE
Base/PETG
Gasket/PE
*Description:
• Right angle cap/CH-J030G.
• Round angle cap/CH-J030GR.
• Base can be injected transparent or with color.

CH-J050G / GR

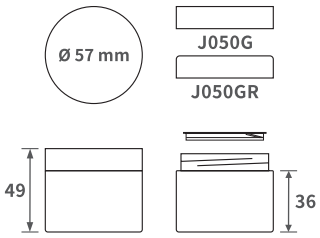

*Dimension:
Ø 57 mm x 49 mm
(cap 13 mm, base 36 mm)
*Capacity 50 ml / 1.76 oz
*Material:
Cap/AS+ABS
Inner cap/PP
Inner cover/PE
Base/PETG
Gasket/PE
*Description:
• Right angle cap/CH-J050G.
• Round angle cap/CH-J050GR.
• Base can be injected transparent or with color.

CH-J075G / GR

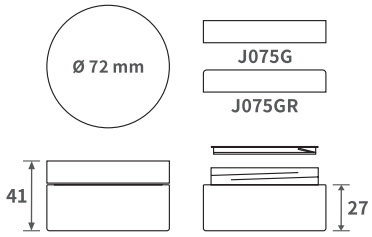

*Dimension:
Ø 72 mm x 41 mm
(cap 14 mm, base 27 mm)
*Capacity 75 ml / 2.64 oz
*Material:
Cap/AS+ABS
Inner cap/PP
Inner cover/PE
Base/PETG
Gasket/PE
*Description:
• Right angle cap/CH-J075G.
• Round angle cap/CH-J075GR.
• Base can be injected transparent or with color.

CH-J100G / GR

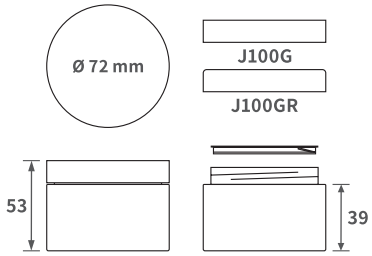

*Dimension:
Ø 72 mm x 53 mm
(cap 14 mm, base 39 mm)
*Capacity 100 ml / 3.52 oz
*Material:
Cap/AS+ABS
Inner cap/PP
Inner cover/PE
Base/PETG
Gasket/PE
*Description:
• Right angle cap/CH-J100G.
• Round angle cap/CH-J100GR.
• Base can be injected transparent or with color.

CH-J120G / GR

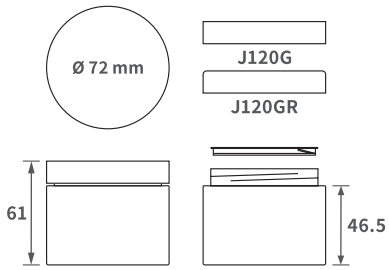

*Dimension:
Ø 72 mm x 61 mm
(cap 14 mm, base 46.5 mm)
*Capacity 120 ml / 4.224 oz
*Material:
Cap/AS+ABS
Inner cap/PP
Inner cover/PE
Base/PETG
Gasket/PE
*Description:
• Right angle cap/CH-J120G.
• Round angle cap/CH-J120GR.
• Base can be injected transparent or with color.

CH-J150G / GR

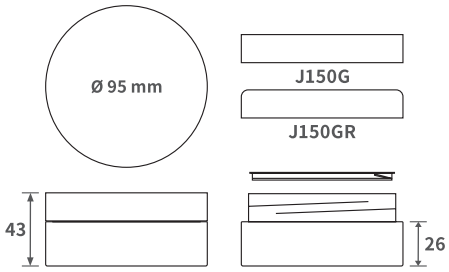

*Dimension:
Ø 95 mm x 43 mm
(cap 16.5 mm, base 26 mm)
*Capacity 150 ml / 5.28 oz
*Material:
Cap/AS+ABS
Inner cap/PP
Inner cover/PE
Base/PETG
Gasket/PE
*Description:
• Right angle cap/CH-J150G.
• Round angle cap/CH-J150GR.
• Base can be injected transparent or with color.

CH-J200G / GR

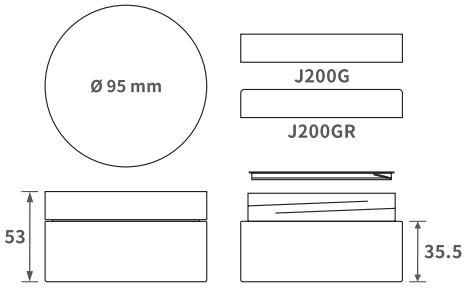

*Dimension:
Ø 95 mm x 53 mm
(cap 16.5 mm, base 35.5 mm)
*Capacity 200 ml / 7.04 oz
*Material:
Cap/AS+ABS
Inner cap/PP
Inner cover/PE
Base/PETG
Gasket/PE
*Description:
• Right angle cap/CH-J200G.
• Round angle cap/CH-J200GR.
• Base can be injected transparent or with color.

CH-J250G / GR

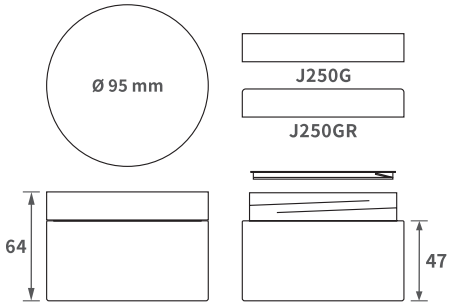

*Dimension:
Ø 95 mm x 64 mm
(cap 16.5 mm, base 47 mm)
*Capacity 250 ml / 8.8 oz
*Material:
Cap/AS+ABS
Inner cap/PP
Inner cover/PE
Base/PETG
Gasket/PE
*Description:
• Right angle cap/CH-J250G.
• Round angle cap/CH-J250GR.
• Base can be injected transparent or with color.

CH-J300G / GR

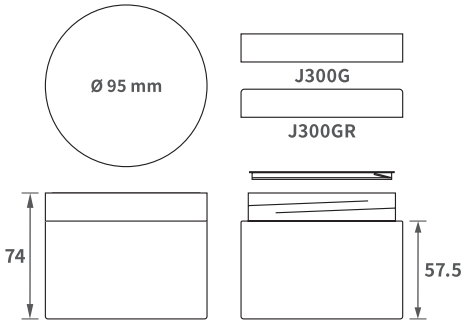

*Dimension:
Ø 95 mm x 74 mm
(cap 16.5 mm, base 57.5 mm)
*Capacity 300 ml / 10.56 oz
*Material:
Cap/AS+ABS
Inner cap/PP
Inner cover/PE
Base/PETG
Gasket/PE
*Description:
• Right angle cap/CH-J300G.
• Round angle cap/CH-J300GR.
• Base can be injected transparent or with color.

PETG JAR

J015G / GR

J020G / GR

J030G / GR

J050G / GR

J075G / GR

J100G / GR

J120G / GR

J150G / GR

J200G / GR

J250G / GR

J300G / GR

CH-J005DP / DPR

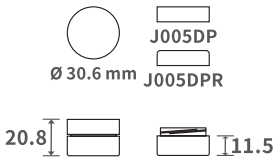

*Dimension:
Ø 30.6 mm x 20.8 mm
(cap 8.8 mm, base 11.5 mm)
*Capacity 5 ml / 0.176 oz
*Material:
Cap/PP
Base/Bi-injection PP+PP
Gasket/PE
*Description:
• Right angle cap/CH-J005DP.
• Round angle cap/CH-J005DPR.

CH-J010DP / DPR

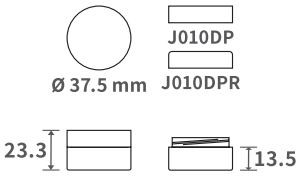

*Dimension:
Ø 37.5 mm x 23.3 mm
(cap 9.8 mm, base 13.5 mm)
*Capacity 10 ml / 0.352 oz
*Material:
Cap/PP
Base/Bi-injection PP+PP
Gasket/PE
*Description:
• Right angle cap/CH-J010DP.
• Round angle cap/CH-J010DPR.

CH-J015DP / DPR

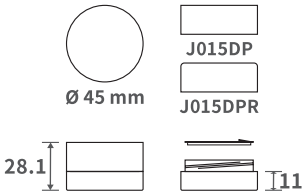

*Dimension:
Ø 45 mm x 28.1 mm
(cap 17 mm, base 11 mm)
*Capacity 15 ml / 0.528 oz
*Material:
Cap/PP
Inner cover/PE
Base/Bi-injection PP+PP
Gasket/PE
*Description:
• Right angle cap/CH-J015DP.
• Round angle cap/CH-J015DPR.

CH-J020DP / DPR

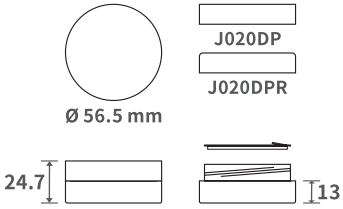

*Dimension:
Ø 56.5 mm x 24.7 mm
(cap 11.7 mm, base 13 mm)
*Capacity 20 ml / 0.704 oz
*Material:
Cap/PP
Inner cover/PE
Base/Bi-injection PP+PP
Gasket/PE
*Description:
• Right angle cap/CH-J020DP.
• Round angle cap/CH-J020DPR.

CH-J030DP / DPR

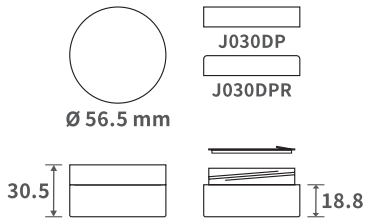

*Dimension:
Ø 56.5 mm x 30.5 mm
(cap 11.7 mm, base 18.8 mm)
*Capacity 30 ml / 1.056 oz
*Material:
Cap/PP
Inner cover/PE
Base/Bi-injection PP+PP
Gasket/PE
*Description:
•Right angle cap/CH-J030DP.
•Round angle cap/CH-J030DPR.

CH-J050DP / DPR

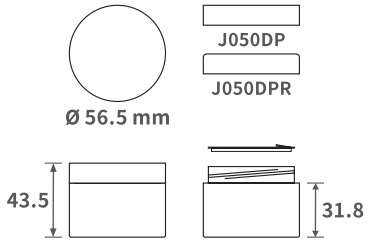

*Dimension:
Ø 56.5 mm x 43.5 mm
(cap 11.7 mm, base 31.8 mm)
*Capacity 50 ml / 1.76 oz
*Material:
Cap/PP
Inner cover/PE
Base/Bi-injection PP+PP
Gasket/PE
*Description:
•Right angle cap/CH-J050DP.
•Round angle cap/CH-J050DPR.

CH-J075DP / DPR

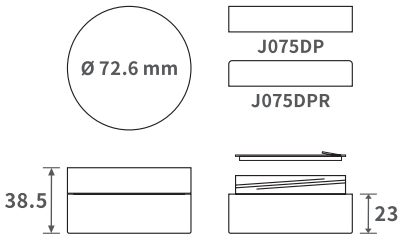

*Dimension:
Ø 72.6 mm x 38.5 mm
(cap 15 mm, base 23 mm)
*Capacity 75 ml / 2.64 oz
*Material:
Cap/PP
Inner cover/PE
Base/Bi-injection PP+PP
Gasket/PE
*Description:
•Right angle cap/CH-J075DP.
•Round angle cap/CH-J075DPR.

CH-J100DP / DPR

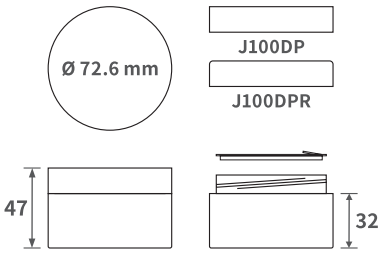

*Dimension:
Ø 72.6 mm x 47 mm
(cap 15 mm, base 32 mm)
*Capacity 100 ml / 3.52 oz
*Material:
Cap/PP
Inner cover/PE
Base/Bi-injection PP+PP
Gasket/PE
*Description:
•Right angle cap/CH-J100DP.
•Round angle cap/CH-J100DPR.

CH-J120DP / DPR

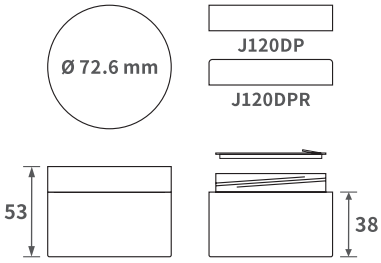

*Dimension:
Ø 72.6 mm x 53 mm
(cap 15 mm, base 38 mm)
*Capacity 120 ml / 4.224 oz
*Material:
Cap/PP
Inner cover/PE
Base/Bi-injection PP+PP
Gasket/PE
*Description:
•Right angle cap/CH-J120DP.
•Round angle cap/CH-J120DPR.

CH-J150DP / DPR

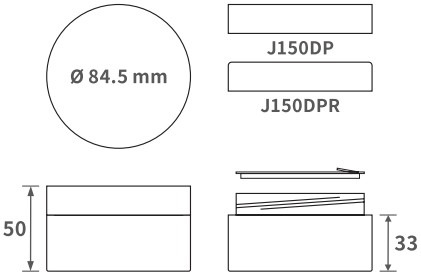

*Dimension:
Ø 84.5 mm x 50 mm
(cap 17 mm, base 33 mm)
*Capacity 150 ml / 5.28 oz
*Material:
Cap/PP
Inner cover/PE
Base/Bi-injection PP+PP
Gasket/PE
*Description:
•Right angle cap/CH-J150DP.
•Round angle cap/CH-J150DPR.

CH-J200DP / DPR

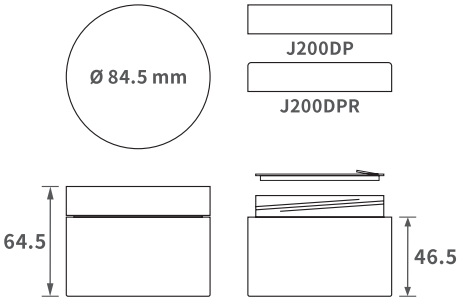

*Dimension:
Ø 84.5 mm x 64.5 mm
(cap 17 mm, base 46.5 mm)
*Capacity 200 ml / 7.04 oz
*Material:
Cap/PP
Inner cover/PE
Base/Bi-injection PP+PP
Gasket/PE
*Description:
•Right angle cap/CH-J200DP.
•Round angle cap/CH-J200DPR.

CH-J250DP / DPR

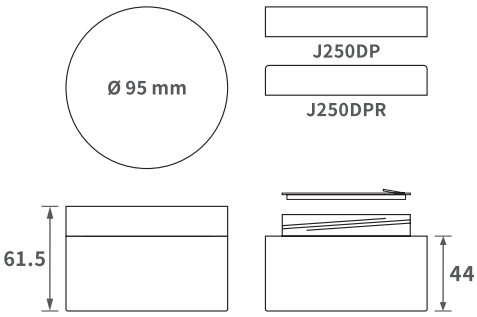

*Dimension:
Ø 95 mm x 61.5 mm
(cap 17.5 mm, base 44 mm)
*Capacity 250 ml / 8.8 oz
*Material:
Cap/PP
Inner cover/PE
Base/Bi-injection PP+PP
Gasket/PE
*Description:
•Right angle cap/CH-J250DP.
•Round angle cap/CH-J250DPR.

CH-J300DP / DPR-P.120

CH-J005DPB

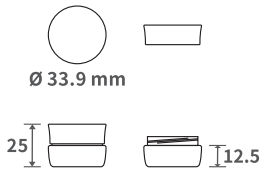

*Dimension:
Ø 33.9 mm x 25 mm
(cap 11.5 mm, base 12.5 mm)
*Capacity 5 ml / 0.176 oz
*Material:
Cap/PP
Base/Bi-injection PP+PP
Gasket/PE

CH-J010DPB

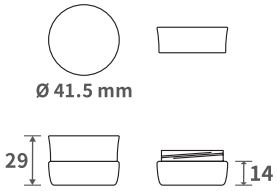

*Dimension:
Ø 41.5 mm x 29 mm
(cap 15 mm, base 14 mm)
*Capacity 10 ml / 0.352 oz
*Material:
Cap/PP
Base/Bi-injection PP+PP
Gasket/PE

CH-J015DPB

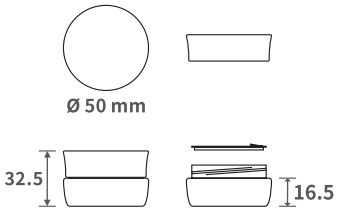

*Dimension:
Ø 50 mm x 32.5 mm
(cap 15.5 mm, base 16.5 mm)
*Capacity 15 ml / 0.528 oz
*Material:
Cap/PP
Inner cover/PE
Base/Bi-injection PP+PP
Gasket/PE

CH-J020DPB

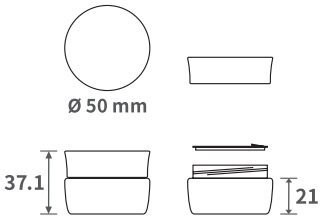

*Dimension:
Ø 50 mm x 37.1 mm
(cap 15.5 mm, base 21 mm)
*Capacity 20 ml / 0.704 oz
*Material:
Cap/PP
Inner cover/PE
Base/Bi-injection PP+PP
Gasket/PE

CH-J030DPB

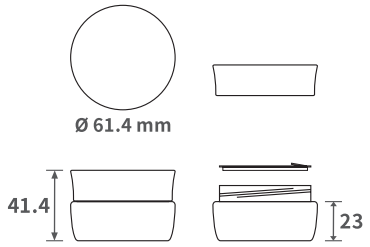

*Dimension:
Ø 61.4 mm x 41.4 mm
(cap 18 mm, base 23 mm)
*Capacity 30 ml / 1.056 oz
*Material:
Cap/PP
Inner cover/PE
Base/Bi-injection PP+PP
Gasket/PE

CH-J050DPB

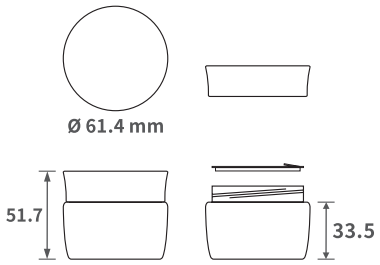

*Dimension:
Ø 61.4 mm x 51.7 mm
(cap 18 mm, base 33.5 mm)
*Capacity 50 ml / 1.76 oz
*Material:
Cap/PP
Inner cover/PE
Base/Bi-injection PP+PP
Gasket/PE

CH-J075DPB

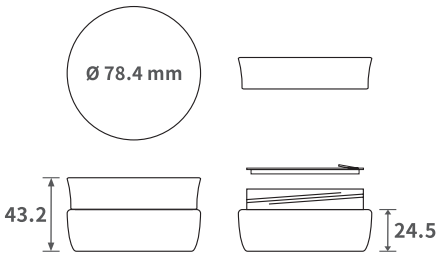

*Dimension:
Ø 78.4 mm x 43.2 mm
(cap 18.5 mm, base 24.5 mm)
*Capacity 75 ml / 2.64 oz
*Material:
Cap/PP
Inner cover/PE
Base/Bi-injection PP+PP
Gasket/PE

CH-J100DPB

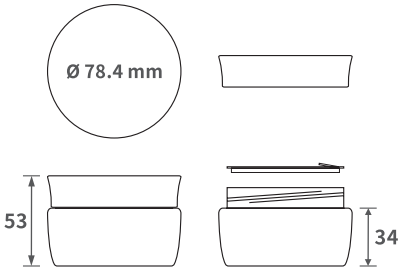

*Dimension:
Ø 78.4 mm x 53 mm
(cap 18.5 mm, base 34 mm)
*Capacity 100 ml / 3.52 oz
*Material:
Cap/PP
Inner cover/PE
Base/Bi-injection PP+PP
Gasket/PE

CH-J120DPB

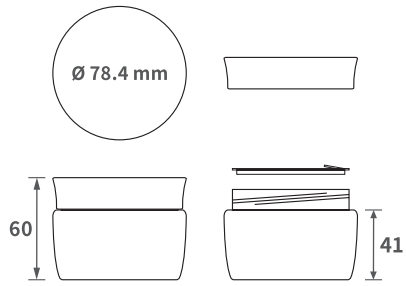

*Dimension:
Ø 78.4 mm x 60 mm
(cap 18.5 mm, base 41 mm)
*Capacity 120 ml / 4.224 oz
*Material:
Cap/PP
Inner cover/PE
Base/Bi-injection PP+PP
Gasket/PE

CH-J150DPB

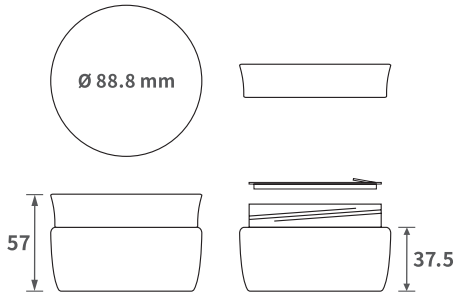

*Dimension:
Ø 88.8 mm x 57 mm
(cap 19.5 mm, base 37.5 mm)
*Capacity 150 ml / 5.28 oz
*Material:
Cap/PP
Inner cover/PE
Base/Bi-injection PP+PP
Gasket/PE

CH-J200DPB

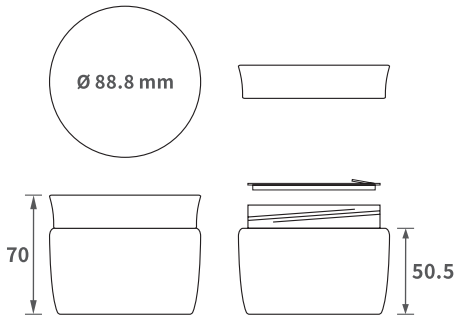

*Dimension:
Ø 88.8 mm x 70 mm
(cap 19.5 mm, base 50.5 mm)
*Capacity 200 ml / 7.04 oz
*Material:
Cap/PP
Inner cover/PE
Base/Bi-injection PP+PP
Gasket/PE

CH-J250DPB

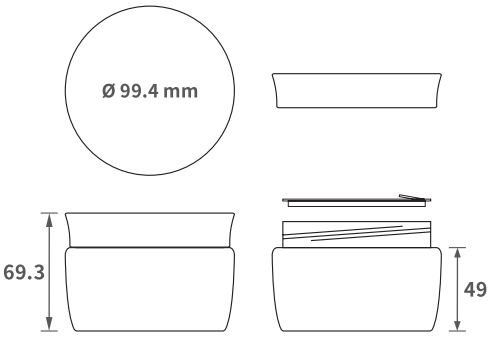

*Dimension:
Ø 99.4 mm x 69.3 mm
(cap 20 mm, base 49 mm)
*Capacity 250 ml / 8.8 oz
*Material:
Cap/PP
Inner cover/PE
Base/Bi-injection PP+PP
Gasket/PE

CH-J300DPB

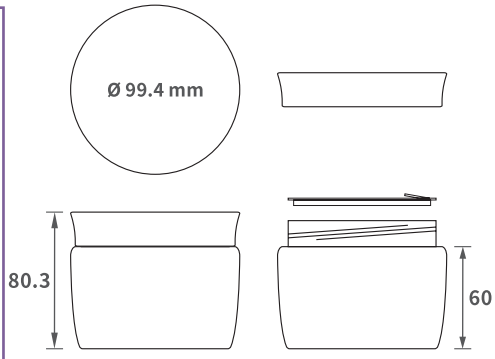

*Dimension:
Ø 99.4 mm x 80.3 mm
(cap 20 mm, base 60 mm)
*Capacity 300 ml / 10.56 oz
*Material:
Cap/PP
Inner cover/PE
Base/Bi-injection PP+PP
Gasket/PE

CH-J300DP / DPR

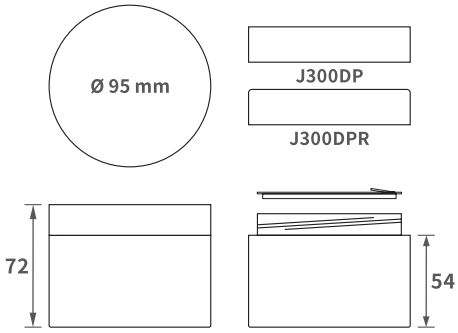

*Dimension:
Ø 95 mm x 72 mm
(cap 18 mm, base 54 mm)
*Capacity 300 ml / 10.56 oz
*Material:
Cap/PP
Inner cover/PE
Base/Bi-injection PP+PP
Gasket/PE
*Description:
• Right angle cap/CH-J300DP.
• Round angle cap/CH-J300DPR.

P.P. BI-INJECTION JAR DP / DPR

J005DP/DPR

J010DP/DPR

J015DP/DPR

J020DP/DPR

J030DP/DPR

J050DP/DPR

J075DP/DPR

J100DP/DPR

J120DP/DPR

J150DP/DPR

J200DP/DPR

J250DP/DPR

J300DP/DPR

P.P. BI-INJECTION JAR DPB

J005DPB

J010DPB

J015DPB

J020DPB

J030DPB

J050DPB

J075DPB

J100DPB

J120DPB

J150DPB

J200DPB

J250DPB

J300DPB

CH-J015P

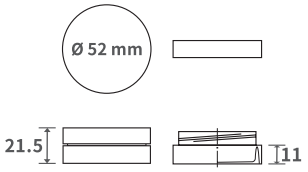

*Dimension:
Ø 52 mm x 21.5 mm
(cap 10 mm, base 11 mm)
*Capacity 18 ml / 0.63 oz
*Material:
Cap/ABS or PP
Base/PP (one pc)
Gasket/PE
*Description:
Base is one piece injection.

CH-J030P

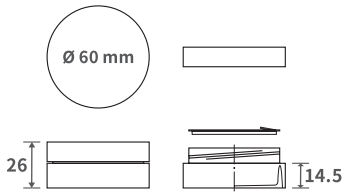

*Dimension:
Ø 60 mm x 26 mm
(cap 11 mm, base 14.5 mm)
*Capacity:
25 ml / 0.88 oz with inner cover
33 ml / 1.16 oz without inner cover
*Material:
Cap/ABS or PP
Inner cover/PE
Base/PP (one pc)
Gasket/PE
*Description:
Base is one piece injection.

CH-J050P

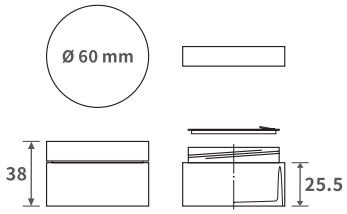

*Dimension:
Ø 60 mm x 38 mm
(cap 12 mm, base 25.5 mm)
*Capacity:
45 ml / 1.58 oz with inner cover
53 ml / 1.87 oz without inner cover
*Material:
Cap/ABS or PP
Inner cover/PE
Base/PP (one pc)
Gasket/PE
*Description:
Base is one piece injection.

CH-J080P

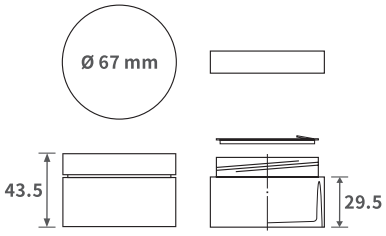

*Dimension:
Ø 67 mm x 43.5 mm
(cap 13.5 mm, base 29.5 mm)
*Capacity:
70 ml / 2.46 oz with inner cover
81 ml / 2.85 oz without inner cover
*Material:
Cap/ABS or PP
Inner cover/PE
Base/PP (one pc)
Gasket/PE
*Description:
Base is one piece injection.

CH-J100P

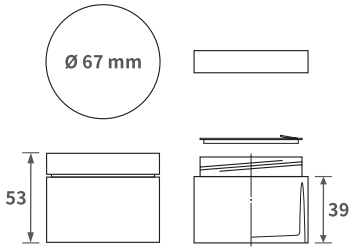

*Dimension:
Ø 67 mm x 53 mm
(cap 13 mm, base 39 mm)
*Capacity:
80 ml / 2.82 oz with inner cover
101 ml / 3.56 oz without inner cover
*Material:
Cap/ABS or PP
Inner cover/PE
Base/PP (one pc)
Gasket/PE
*Description:
Base is one piece injection.

CH-J120P

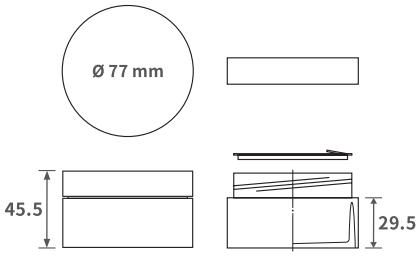

*Dimension:
Ø 77 mm x 45.5 mm
(cap 15.5 mm, base 29.5 mm)
*Capacity:
97 ml / 3.42 oz with inner cover
122 ml / 4.30 oz without inner cover
*Material:
Cap/ABS or PP
Inner cover/PE
Base/PP (one pc)
Gasket/PE
*Description:
Base is one piece injection.

CH-J150P

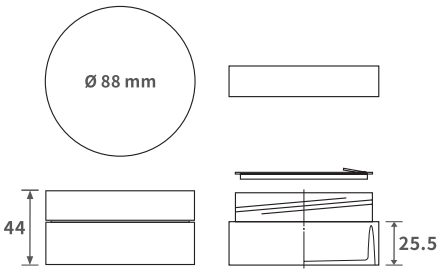

*Dimension:
Ø 88 mm x 44 mm
(cap 18 mm, base 25.5 mm)
*Capacity:
110 ml / 3.88 oz with inner cover
150 ml / 5.29 oz without inner cover
*Material:
Cap/ABS or PP
Inner cover/PE
Base/PP (one pc)
Gasket/PE
*Description:
Base is one piece injection.

CH-J200P

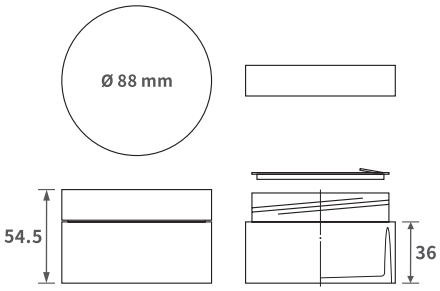

*Dimension:
Ø 88 mm x 54.5 mm
(cap 18 mm, base 36 mm)
*Capacity:
160 ml / 5.64 oz with inner cover
200 ml / 7.05 oz without inner cover
*Material:
Cap/ABS or PP
Inner cover/PE
Base/PP (one pc)
Gasket/PE
*Description:
Base is one piece injection.

CH-J250P

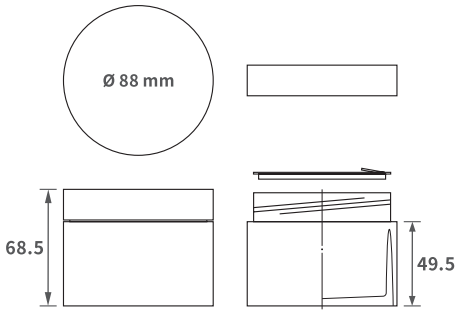

*Dimension:
Ø 88 mm x 68.5 mm
(cap 18 mm, base 49.5 mm)
*Capacity:
210 ml / 7.41 oz with inner cover
250 ml / 8.81 oz without inner cover
*Material:
Cap/ABS or PP
Inner cover/PE
Base/PP (one pc)
Gasket/PE
*Description:
Base is one piece injection.

P.P. JAR / BASE ONE PC

J015P

J030P

J050P

J080P

J100P

J120P

J150P

J200P

J250P

CH-J015SA

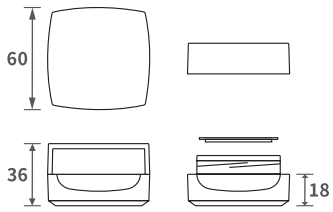

*Dimension:
60 mm x 60 mm x 36 mm
(cap 18 mm, base 18 mm)
*Capacity 15 ml / 0.53 oz
*Material:
Cap/PMMA or ABS
Inner cap/PP
Inner cover/PE
Base/PMMA
Inner cup/PP
Gasket/PE

CH-J030SA

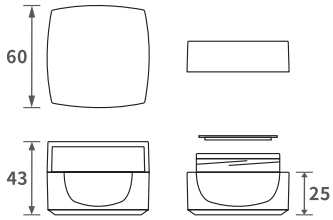

*Dimension:
60 mm x 60 mm x 43 mm
(cap 18 mm, base 25 mm)
*Capacity 30 ml / 1.06 oz
*Material:
Cap/PMMA or ABS
Inner cap/PP
Inner cover/PE
Base/PMMA
Inner cup/PP
Gasket/PE

CH-J050SA

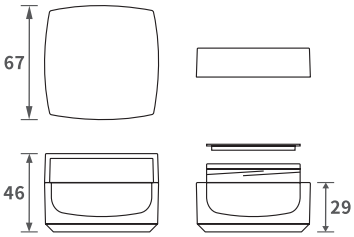

*Dimension:
67 mm x 67 mm x 46 mm
(cap 17 mm, base 29 mm)
*Capacity 50 ml / 1.76 oz
*Material:
Cap/PMMA or ABS
Inner cap/PP
Inner cover/PE
Base/PMMA
Inner cup/PP
Gasket/PE

CH-J200SA

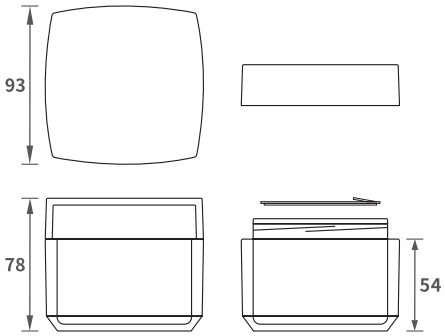

*Dimension:
93 mm x 93 mm x 78 mm
(cap 24 mm, base 54 mm)
*Capacity 200 ml / 7.05 oz
*Material:
Cap/PMMA or ABS
Inner cap/PP
Inner cover/PE
Base/PMMA
Inner cup/PP
Gasket/PE

CH-J015RA

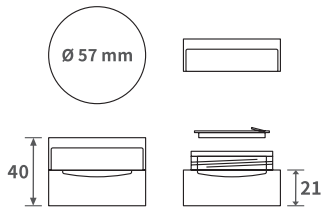

*Dimension:
Ø 57 mm x 40 mm
(cap 19 mm, base 21 mm)
*Capacity 15 ml / 0.53 oz
*Material:
Cap/PMMA
Inner cap/PP
Inner cover/PE
Base/PMMA
Inner cup/PP
Gasket/PE

CH-J030RA

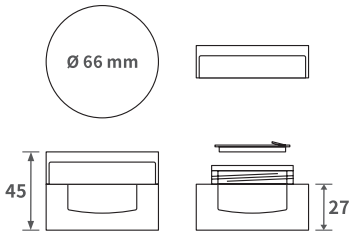

*Dimension:
Ø 66 mm x 45 mm
(cap 19 mm, base 27 mm)
*Capacity 30 ml / 1.06 oz
*Material:
Cap/PMMA
Inner cap/ABS
Inner cover/PE
Base/PMMA
Inner cup/PP
Gasket/PE

CH-J050RA

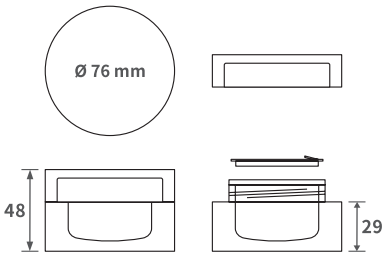

*Dimension:
Ø 76 mm x 48 mm
(cap 19 mm, base 29 mm)
*Capacity 50 ml / 1.76 oz
*Material:
Cap/PMMA
Inner cap/ABS
Inner cover/PE
Base/PMMA
Inner cup/PP
Gasket/PE

CH-J100RA

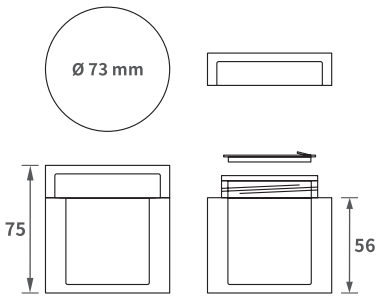

*Dimension:
Ø 73 mm x 75 mm
(cap 19 mm, base 56 mm)
*Capacity 100 ml / 3.53 oz
*Material:
Cap/PMMA
Inner cap/ABS
Inner cover/PE
Base/PMMA
Inner cup/PP
Gasket/PE

CH-J150RA

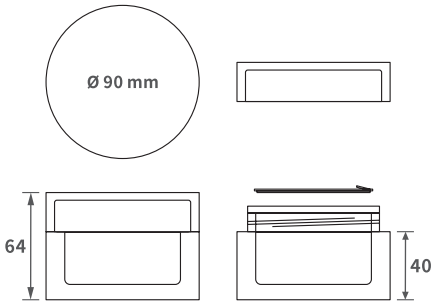

*Dimension:
Ø 90 mm x 64 mm
(cap 23 mm, base 40 mm)
*Capacity 150 ml / 5.29 oz
*Material:
Cap/PMMA
Inner cap/ABS
Inner cover/PE
Base/PMMA
Inner cup/PP
Gasket/PE

CH-J200RA

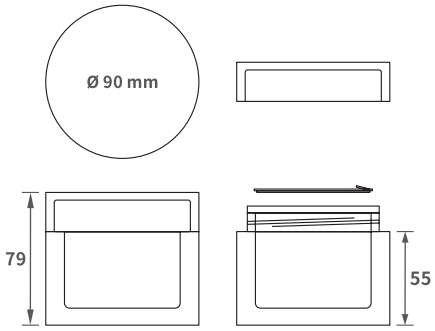

*Dimension:
Ø 90 mm x 79 mm
(cap 23 mm, base 55 mm)
*Capacity 200 ml / 7.05 oz
*Material:
Cap/PMMA
Inner cap/ABS
Inner cover/PE
Base/PMMA
Inner cup/PP
Gasket/PE

PMMA JAR / SQUARE

J015SA

J030SA

J050SA

J200SA

PMMA JAR / ROUND

J015RA

J030RA

J050RA

J100RA

J150RA

J200RA

CH-B020SA / B015SA

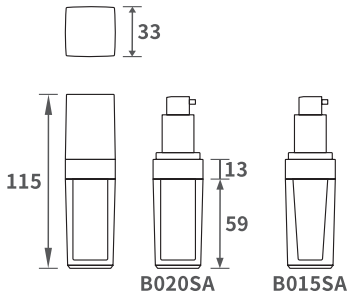

*Dimension:
33 mm x 33 mm x 115 mm
(cap 43 mm, neck 13 mm, bottle 59 mm)
*Capacity
B020SA：31 ml / 1.10 oz
B015SA：21 ml / 0.74 oz
*Material:
Cap/PMMA
Pump/PP
Neck/ABS
Inner bottle/PETG
Bottle/PMMA

CH-B030SA / B320SA

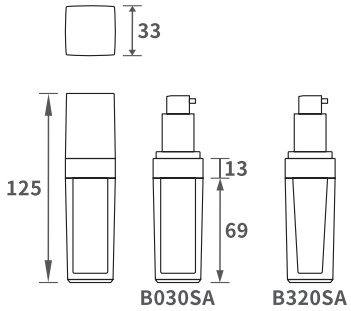

*Dimension:
33 mm x 33 mm x 125 mm
(cap 43 mm, neck 13 mm, bottle 69 mm)
*Capacity
B030SA：41 ml / 1.45 oz
B320SA：31 ml / 1.10 oz
*Material:
Cap/PMMA
Pump/PP
Neck/ABS
Inner bottle/PETG
Bottle/PMMA

CH-B050SA / B530SA

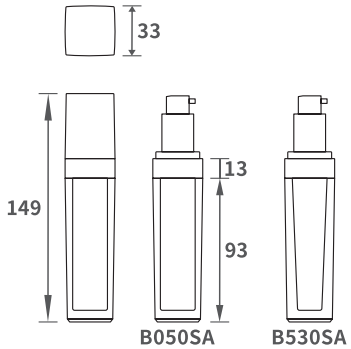

*Dimension:
33 mm x 33 mm x 149 mm
(cap 43 mm, neck 13 mm, bottle 93 mm)
*Capacity
B050SA：53 ml / 1.87 oz
B530SA：41 ml / 1.45 oz
*Material:
Cap/PMMA
Pump/PP
Neck/ABS
Inner bottle/PETG
Bottle/PMMA

CH-B140SA / B120SA

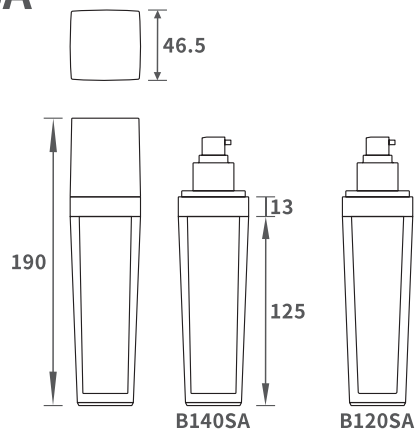

*Dimension:
46.5 mm x 46.5 mm x 190 mm
(cap 52 mm, neck 13 mm, bottle 125 mm)
*Capacity
B140SA：143 ml / 5.04 oz
B120SA：128 ml / 4.51 oz
*Material:
Cap/PMMA
Pump/PP
Neck/ABS
Inner bottle/PETG
Bottle/PMMA

CH-B030RA

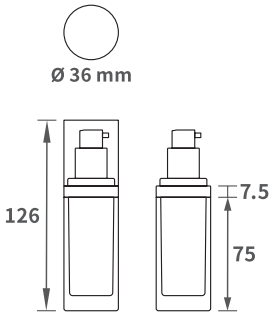

*Dimension:
Ø 36 mm x 126 mm
(cap43.5mm,neck7.5mm,bottle 75 mm)
*Capacity 40 ml / 1.41 oz
*Material:
Cap/PMMA
Pump/PP
Neck/Aluminum
Inner bottle/PETG
Bottle/PMMA

CH-B050RA

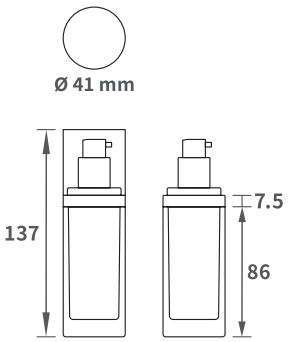

*Dimension:
Ø 41 mm x 137 mm
(cap43.5mm,neck7.5mm,bottle 86 mm)
*Capacity60 ml / 2.12 oz
*Material:
Cap/PMMA
Pump/PP
Neck/Aluminum
Inner bottle/PETG
Bottle/PMMA

CH-B120RA

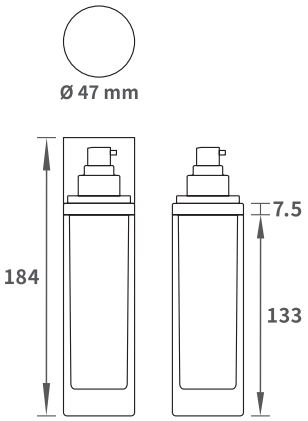

*Dimension:
Ø 47 mm x 184 mm
(cap43.5 mm,neck7.5 mm,bottle133mm)
*Capacity 125 ml / 4.41 oz
*Material:
Cap/PMMA
Pump/PP
Neck/Aluminum
Inner bottle/PETG
Bottle/PMMA

CH-B120RAA

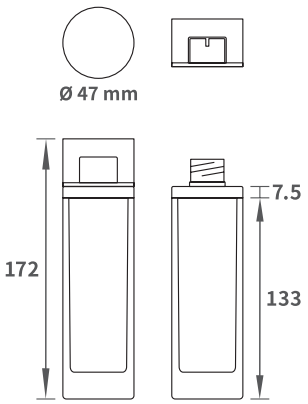

*Dimension:
Ø 47 mm x 172 mm
(cap31.5 mm,neck7.5 mm,bottle133mm)
*Capacity 125 ml / 4.41 oz
*Material:
Cap/PMMA
Inner cap/ABS
Plug/PE
Neck/Aluminum
Inner bottle/PETG
Bottle/PMMA

CH-B030SB

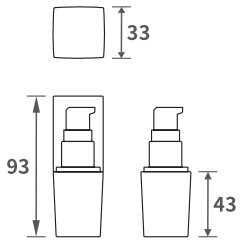

*Dimension:
33 mm x 33 mm x 93 mm
(cap 50 mm, bottle 43 mm)
*Capacity 30 ml
*Material:
Cap/PMMA
Bottle/PETG
Pump/PP

CH-B050SB

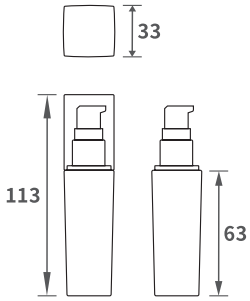

*Dimension:
33 mm x 33 mm x 113 mm
(cap 50 mm, bottle 63 mm)
*Capacity 50 ml
*Material:
Cap/PMMA
Bottle/PETG
Pump/PP

CH-B100SB

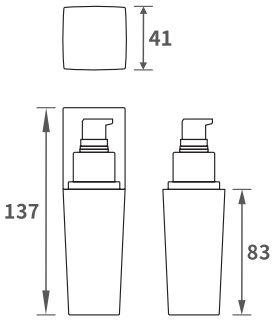

*Dimension:
41 mm x 41 mm x 137 mm
(cap 54 mm, bottle 83 mm)
*Capacity 100 ml
*Material:
Cap/PMMA
Bottle/PETG
Pump/PP

CH-B120SB

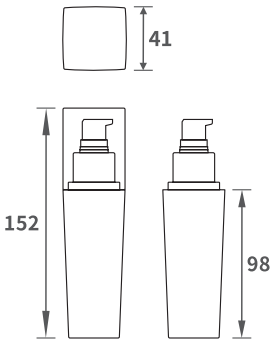

*Dimension:
41 mm x 41 mm x 152 mm
(cap 54 mm, bottle 98 mm)
*Capacity 120 ml
*Material:
Cap/PMMA
Bottle/PETG
Pump/PP

CH-B150SB

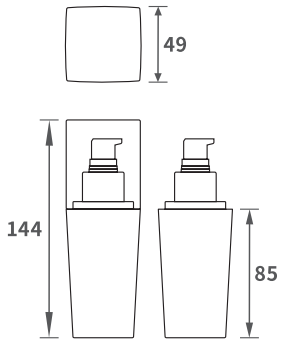

*Dimension:
49 mm x 49 mm x 144 mm
(cap 59 mm, bottle 85 mm)
*Capacity 150 ml
*Material:
Cap/PMMA
Bottle/PETG
Pump/PP

CH-B200SB

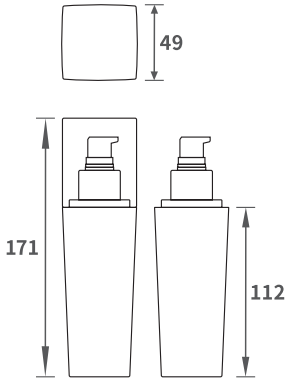

*Dimension:
49 mm x 49 mm x 171 mm
(cap 59 mm, bottle 112 mm)
*Capacity 200 ml
*Material:
Cap/PMMA
Bottle/PETG
Pump/PP

CH-B030RB

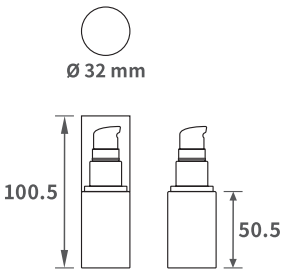

*Dimension:
Ø 32 mm x 100.5 mm
(cap 50 mm, bottle 50.5 mm)
*Capacity 30 ml
*Material:
Cap/PMMA
Bottle/PETG
Pump/PP

CH-B050RB

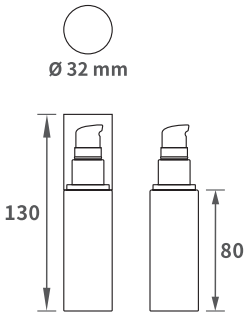

*Dimension:
Ø 32 mm x 130 mm
(cap 50 mm, bottle 80 mm)
*Capacity 50 ml
*Material:
Cap/PMMA
Bottle/PETG
Pump/PP

CH-B100RB

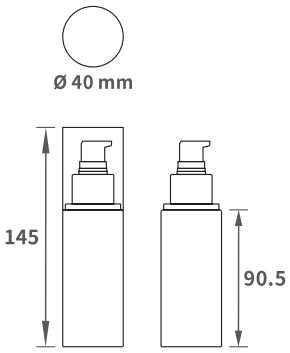

*Dimension:
Ø 40 mm x 145 mm
(cap 54.5 mm, bottle 90.5 mm)
*Capacity 100 ml
*Material:
Cap/PMMA
Bottle/PETG
Pump/PP

CH-B120RB

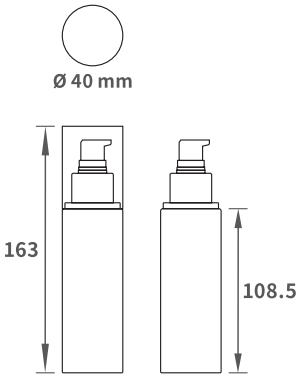

*Dimension:
Ø 40 mm x 163 mm
(cap 54.5 mm, bottle 108.5 mm)
*Capacity 120 ml
*Material:
Cap/PMMA
Bottle/PETG
Pump/PP

CH-B150RB

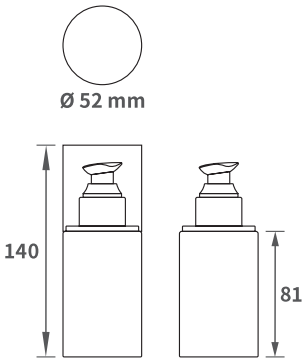

*Dimension:
Ø 52 mm x 140 mm
(cap 59 mm, bottle 81 mm)
*Capacity 150 ml
*Material:
Cap/PMMA
Bottle/PETG
Pump/PP

CH-B150RBH

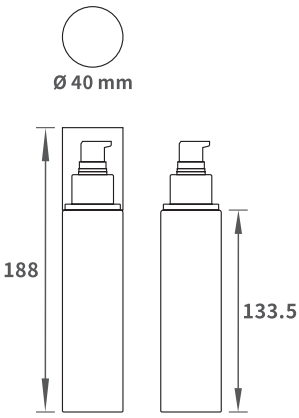

*Dimension:
Ø 40 mm x 188 mm
(cap 54.5 mm, bottle 133.5 mm)
*Capacity 150 ml
*Material:
Cap/PMMA
Bottle/PETG
Pump/PP

CH-B200RB

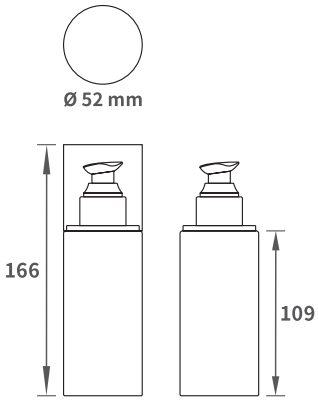

*Dimension:
Ø 52 mm x 166 mm
(cap 57 mm, bottle 109 mm)
*Capacity 200 ml
*Material:
Cap/PMMA
Bottle/PETG
Pump/PP

CH-B200RBH

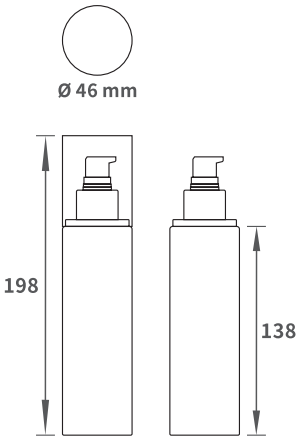

*Dimension:
Ø 46 mm x 198 mm
(cap 60 mm, bottle 138 mm)
*Capacity 200 ml
*Material:
Cap/PMMA
Bottle/PETG
Pump/PP

CH-B250RB

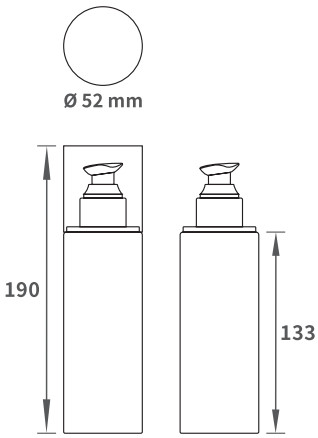

*Dimension:
Ø 52 mm x 190 mm
(cap 57 mm, bottle 133 mm)
*Capacity 250 ml
*Material:
Cap/PMMA
Bottle/PETG
Pump/PP

CH-B250RBH

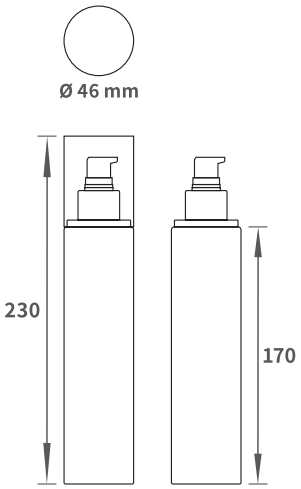

*Dimension:
Ø 46 mm x 230 mm
(cap 60 mm, bottle 170 mm)
*Capacity 250 ml
*Material:
Cap/PMMA
Bottle/PETG
Pump/PP

PMMA BOTTLE / SQUARE

B020SA

B030SA

B050SA

B140SA

PMMA BOTTLE / ROUND

B030RA

B050RA

B120RA

B120RAA

PETG BOTTLE / SQUARE

B030SB

B050SB

B100SB

B120SB

B150SB

B200SB

PETG BOTTLE / ROUND

B030RB

B050RB

B100RB

B120RB

B150RB

B150RBH

B200RB

B200RBH

B250RB

B250RBH

CH-B030RCH

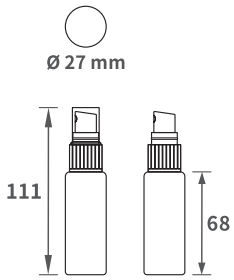

*Dimension:
Ø 27 mm x 111 mm
(cap 25 mm, neck 18 mm, bottle 68 mm)
*Capacity 30 ml
*Material:
Cap/PP
Bottle/PET
Pump/PP

CH-B050RC

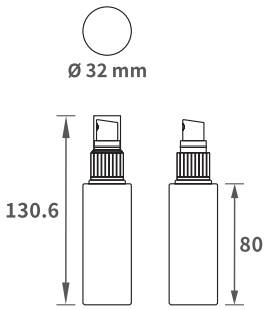

*Dimension:
Ø 32 mm x 130.6 mm
(cap 25 mm, neck 18 mm, bottle 80 mm)
*Capacity 50 ml
*Material:
Cap/PP
Bottle/PET
Pump/PP

CH-B100RC

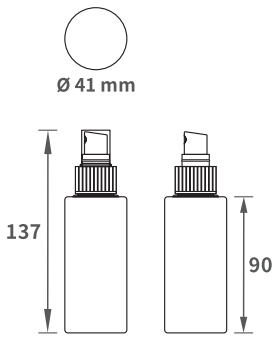

*Dimension:
Ø 41 mm x 137 mm
(cap 25 mm, neck 18 mm, bottle 90 mm)
*Capacity 100 ml
*Material:
Cap/PP
Bottle/PET
Pump/PP

CH-B120RC

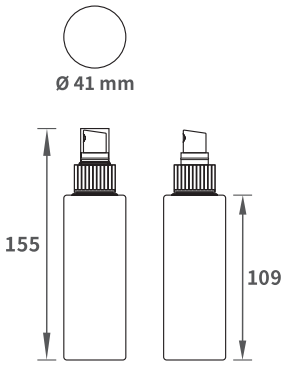

*Dimension:
Ø 41 mm x 155 mm
(cap 25 mm, neck 18 mm, bottle 109 mm)
*Capacity 120 ml
*Material:
Cap/PP
Bottle/PET
Pump/PP

CH-B150RCH

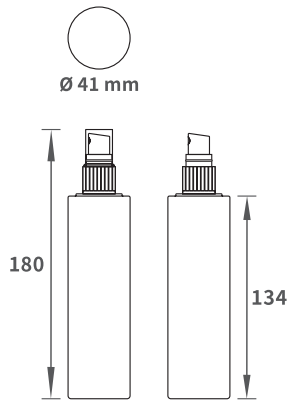

*Dimension:
Ø 41 mm x 180 mm
(cap 25 mm, neck 18 mm, bottle 134 mm)
*Capacity 150 ml
*Material:
Cap/PP
Bottle/PET
Pump/PP

CH-B200RC

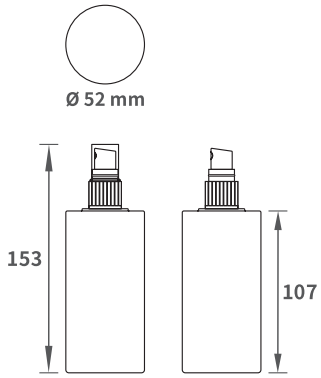

*Dimension:
Ø 52 mm x 153 mm
(cap 25 mm, neck 18 mm, bottle 107 mm)
*Capacity 200 ml
*Material:
Cap/PP
Bottle/PET
Pump/PP

CH-B200RCH

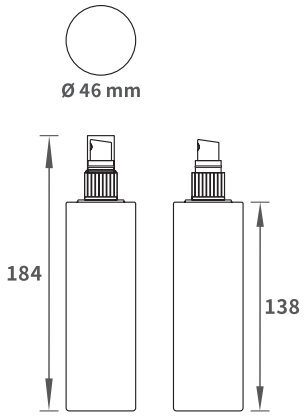

*Dimension:
Ø 46 mm x 184 mm
(cap 25 mm, neck 18 mm, bottle 138 mm)
*Capacity 200 ml
*Material:
Cap/PP
Bottle/PET
Pump/PP

CH-B250RCH

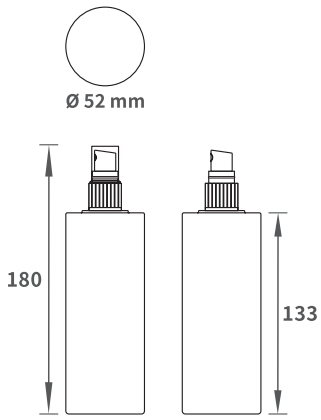

*Dimension:
Ø 52 mm x 180 mm
(cap 25 mm, neck 18 mm, bottle 133 mm)
*Capacity 250 ml
*Material:
Cap/PP
Bottle/PET
Pump/PP

CH-B050RD

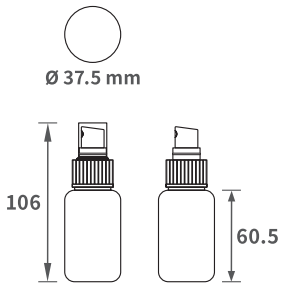

*Dimension:
Ø 37.5 mm x 106 mm
(cap 25 mm,neck 18 mm,bottle 60.5 mm)
*Capacity 50 ml
*Material:
Cap/PP
Bottle/PET
Pump/PP

CH-B100RD

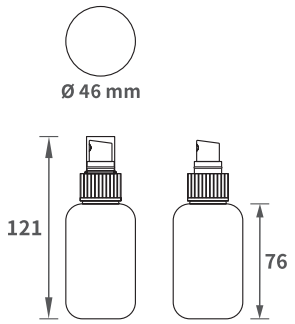

*Dimension:
Ø 46 mm x 121 mm
(cap 25 mm, neck 18 mm, bottle 76 mm)
*Capacity 100 ml
*Material:
Cap/PP
Bottle/PET
Pump/PP

CH-B150RD

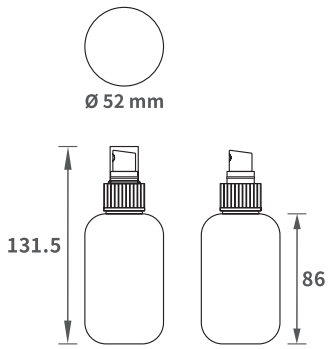

*Dimension:
Ø 52 mm x 131.5 mm
(cap 25 mm, neck 18 mm, bottle 86 mm)
*Capacity 150 ml
*Material:
Cap/PP
Bottle/PET
Pump/PP

CH-B200RD

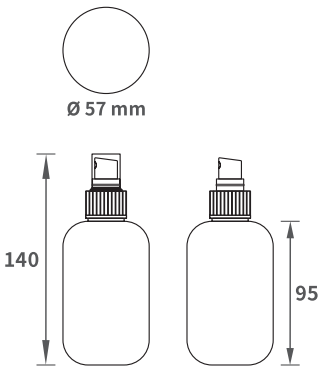

*Dimension:
Ø 57 mm x 140 mm
(cap 25 mm, neck 18 mm, bottle 95 mm)
*Capacity 200 ml
*Material:
Cap/PP
Bottle/PET
Pump/PP

CH-B250RD

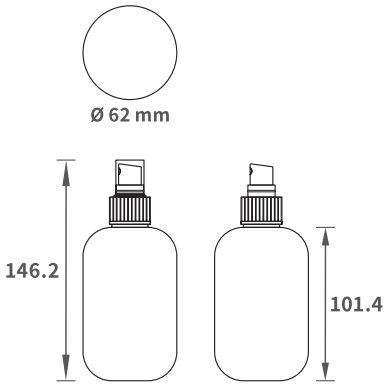

*Dimension:
Ø 62 mm x 146.2 mm
(cap25 mm,neck18 mm,bottle 101.4 mm)
*Capacity 250 ml
*Material:
Cap/PP
Bottle/PET
Pump/PP

CH-B300RD

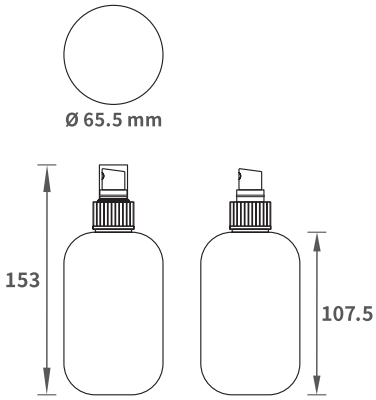

*Dimension:
Ø 65.5 mm x 153 mm
(cap 25 mm,neck 18 mm,bottle107.5mm)
*Capacity 300 ml
*Material:
Cap/PP
Bottle/PET
Pump/PP

PET BOTTLE ROUND

PET BOTTLE ROUND

PUMP SPRAY +CAP

LIQUID PUMP +CAP A:

LIQUID PUMP +CAP B:

LIQUID PUMP +CAP C:

FLIPTOP CAP

SCREW CAP