POT

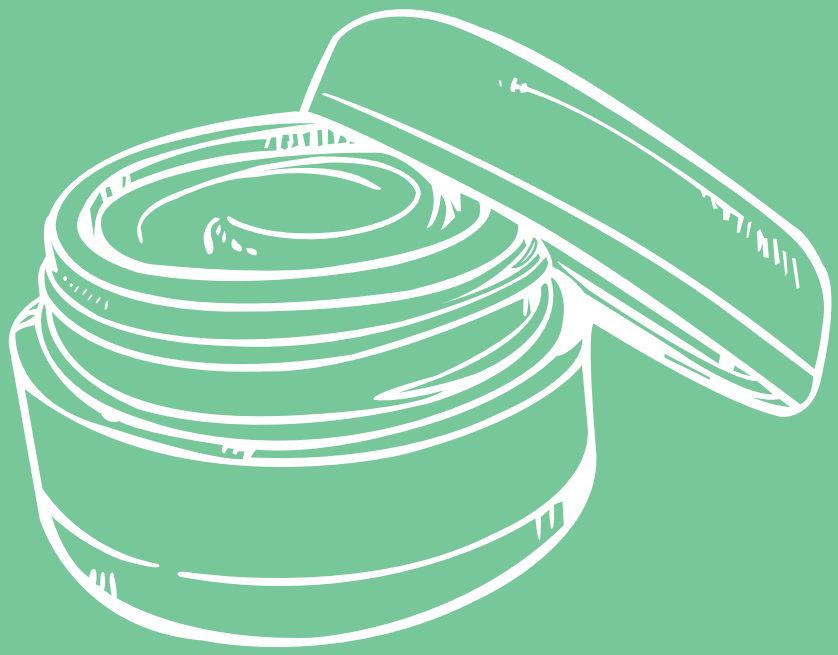

CH-T005

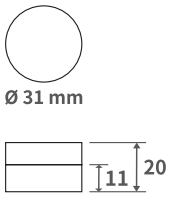

*Dimension:
Ø 31 mm x 20 mm
(cap 9 mm, base 11 mm)
*Capacity 5 g
*Material:
Cap/ABS or PP
Base/PETG
Gasket/EPE
*Description:
Without sifter.

CH-T010

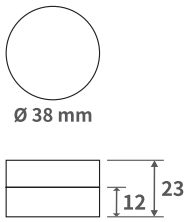

*Dimension:
Ø 38 mm x 23 mm
(cap 11 mm, base 12 mm)
*Capacity 10 g
*Material:
Cap/ABS
Base/PS
Gasket/PE
*Description:
Without sifter.

CH-T010A

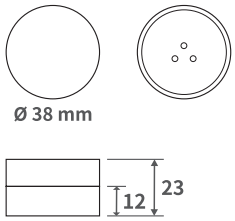

*Dimension:
Ø 38 mm x 23 mm
(cap 11 mm, base 12 mm)
*Capacity 10 g
*Material:
Cap/ABS
Base/PS
Gasket/PE
Sifter/PP
Label/PVC
*Description:
Sifter with label sealed.

CH-T015

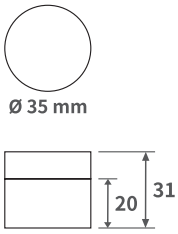

*Dimension:
Ø 35 mm x 31 mm
(cap 11 mm, base 20 mm)
*Capacity 15 g
*Material:
Cap/PS
Base/PS
*Description:
Without sifter.

CH-T115

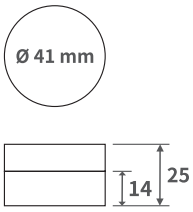

*Dimension:
Ø 41 mm x 25 mm
(cap 11 mm, base 14 mm)
*Capacity 11.5 g
*Material:
Cap/AS+ABS
Base/AS
Gasket/PE
*Description:
Without sifter.

CH-T020

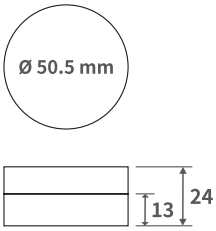

*Dimension:
Ø 50.5 mm x 24 mm
(cap 11 mm, base 13 mm)
*Capacity 20 g
*Material:
Cap/ABS
Base/PS
Gasket/PE
*Description:
Without sifter.

CH-T020A

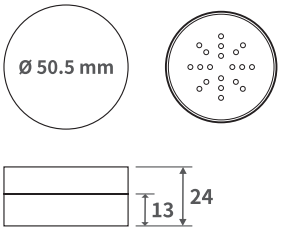

*Dimension:
Ø 50.5 mm x 24 mm
(cap 11 mm, base 13 mm)
*Capacity 20 g
*Material:
Cap/ABS
Base/PS
Gasket/PE
Sifter/PP
Label/PVC
*Description:
Sifter with label sealed.

CH-T020B

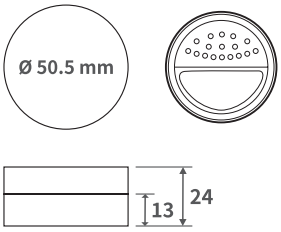

*Dimension:
Ø 50.5 mm x 24 mm
(cap 11 mm, base 13 mm)
*Capacity 20 g
*Material:
Cap/ABS
Base/PS
Gasket/PE
Rotatable sifter/PP
*Description:
Rotatable sifter.

CH-T045

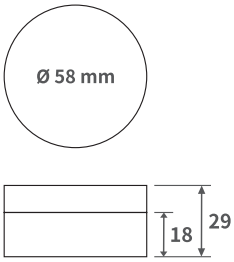

*Dimension:
Ø 58 mm x 29 mm
(cap 11 mm, base 18 mm)
*Capacity 45 g
*Material:
Cap/ABS
Base/PS
Gasket/PE
*Description:
Without sifter.

CH-T045A

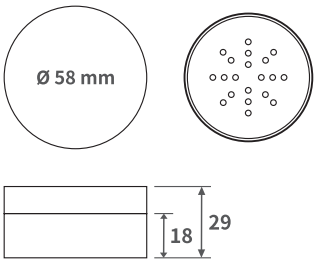

*Dimension:
Ø 58 mm x 29 mm
(cap 11 mm, base 18 mm)
*Capacity 45 g
*Material:
Cap/ABS
Base/PS
Gasket/PE
Sifter/PP
Label/PVC
*Description:
Sifter with label sealed.

CH-T045B

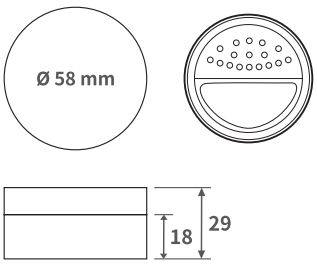

*Dimension:
Ø 58 mm x 29 mm
(cap 11 mm, base 18 mm)
*Capacity 45 g
*Material:
Cap/ABS
Base/PS
Gasket/PE
Rotatable sifter/PP
*Description:
Rotatable sifter.

CH-T005A

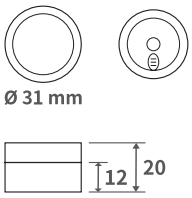

*Dimension:
Ø 31 mm x 20 mm
(cap 8 mm, base 12 mm)
*Capacity 5 g
*Material:
Cap/ABS
Window/AS
Base/AS
Sifter/PP
*Description:
Sifter with closure.

CH-T050V

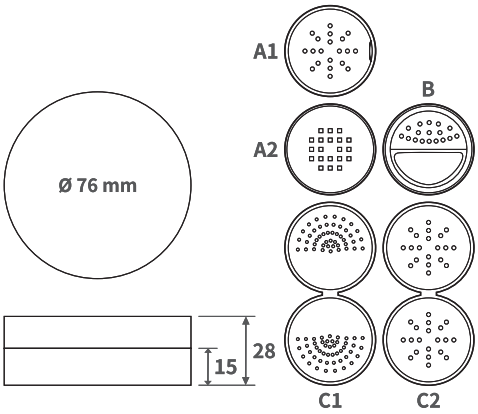

*Dimension:
Ø 76 mm x 28 mm
(cap 13 mm, base 15 mm)
*Capacity 50 g
*Material:
Cap/AS+ABS
Base/PS or AS
Sifter/PP
Label/OPP
*Description:
•A1 & A2 - Sifter with label sealed.
•B - Rotatable sifter.
•C1 & C2 - Double layer sifter, top sifter to close the meshes.

CH-T050R

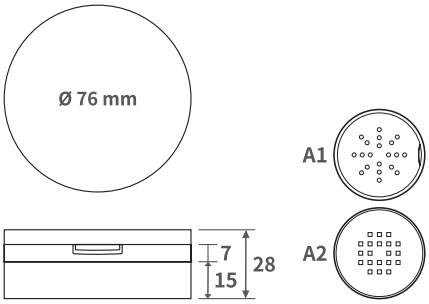

*Dimension:
Ø 76 mm x 28 mm
(cap 6 mm, ring 7 mm, base 15 mm)
*Capacity 50 g
*Material:
Cap/AS+ABS
Base/PS or AS
Ring/AS+ABS
Mirror/Glass
Sifter/PP
Label/OPP
*Description:
•Cap with mirror.
•A1 & A2 - Sifter with label sealed.

CH-T050W

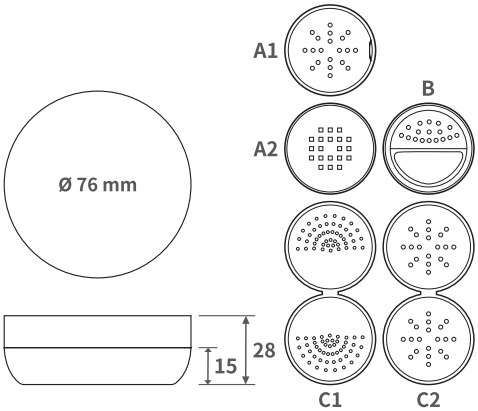

*Dimension:
Ø 76 mm x 28 mm
(cap 13 mm, base 15 mm)
*Capacity 50 g
*Material:
Cap/AS+ABS
Base/PS or AS
Sifter/PP
Label/OPP
*Description:
•A1 & A2 - Sifter with label sealed.
•B - Rotatable sifter.
•C1 & C2 - Double layer sifter, top sifter to close the meshes.

CH-T050X

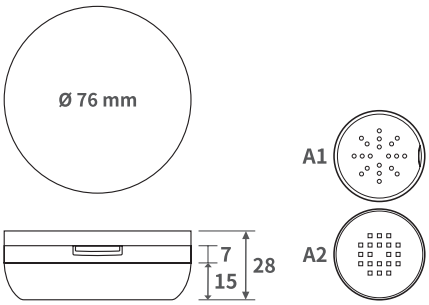

*Dimension:
Ø 76 mm x 28 mm
(cap 6 mm, ring 7 mm, base 15 mm)
*Capacity 50 g
*Material:
Cap/AS+ABS
Base/PS or AS
Ring/AS+ABS
Mirror/Glass
Sifter/PP
Label/OPP
*Description:
•Cap with mirror.
•A1 & A2 - Sifter with label sealed.

CH-T070V

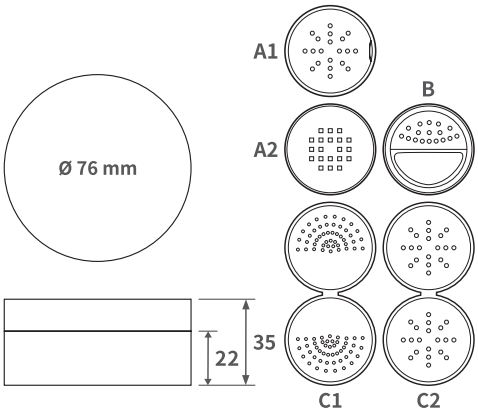

*Dimension:
Ø 76 mm x35 mm
(cap 13 mm, base 22 mm)
*Capacity 70 g
*Material:
Cap/AS+ABS
Base/PS or AS
Sifter/PP
Label/OPP
*Description:
•A1 & A2 - Sifter with label sealed.
•B - Rotatable sifter.
•C1 & C2 - Double layer sifter, top sifter to close the meshes.

CH-T070R

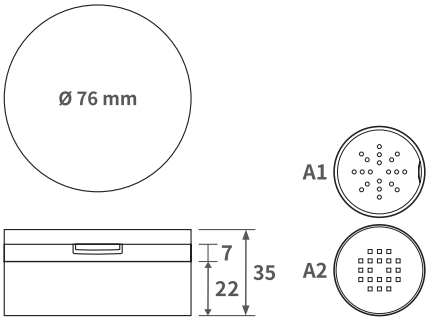

*Dimension:
Ø 76 mm x 35 mm
(cap 6 mm, ring 7 mm, base 22 mm)
*Capacity 70 g
*Material:
Cap/AS+ABS
Base/PS or AS
Ring/AS+ABS
Mirror/Glass
Sifter/PP
Label/OPP
*Description:
•Cap with mirror.
•A1 & A2 - Sifter with label sealed.

CH-T070W

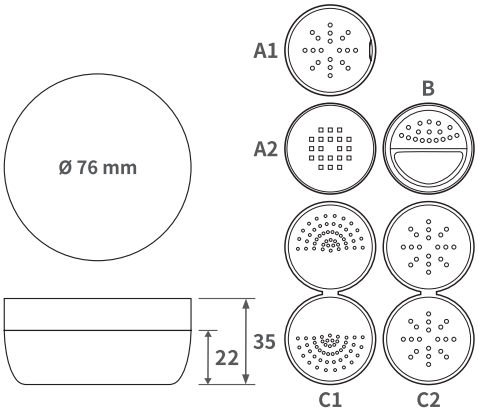

*Dimension:
Ø 76 mm x 35 mm
(cap 13 mm, base 22 mm)
*Capacity 70 g
*Material:
Cap/AS+ABS
Base/PS or AS
Sifter/PP
Label/OPP
*Description:
•A1 & A2 - Sifter with label sealed.
•B - Rotatable sifter.
•C1 & C2 - Double layer sifter, top sifter to close the meshes.

CH-T070X

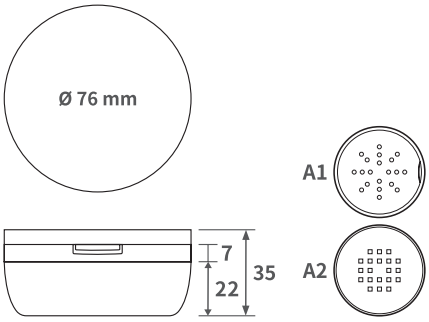

*Dimension:
Ø 76 mm x 35 mm
(cap 6 mm, ring 7 mm, base 22 mm)
*Capacity 70 g
*Material:
Cap/AS+ABS
Base/PS or AS
Ring/AS+ABS
Mirror/Glass
Sifter/PP
Label/OPP
*Description:
•Cap with mirror.
•A1 & A2 - Sifter with label sealed.

CH-T100V

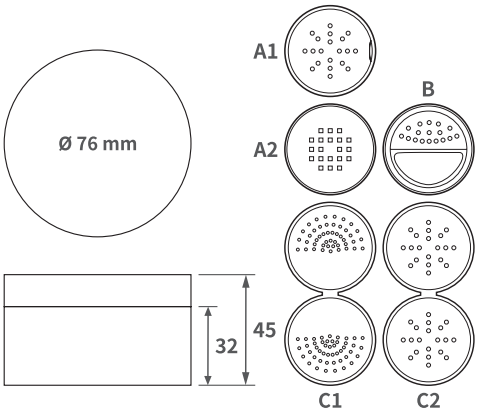

*Dimension:
Ø 76 mm x 45 mm
(cap 13 mm, base 32 mm)
*Capacity 100 g
*Material:
Cap/AS+ABS
Base/PS or AS
Sifter/PP
Label/OPP
*Description:
•A1 & A2 - Sifter with label sealed.
•B - Rotatable sifter.
•C1 & C2 - Double layer sifter, top sifter to close the meshes.

CH-T100R

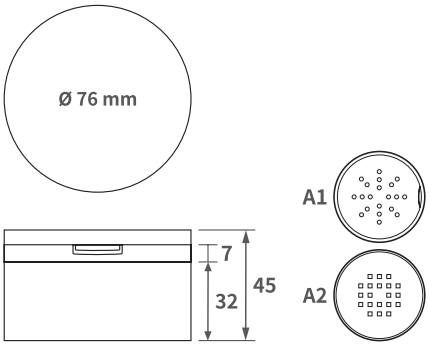

*Dimension:
Ø 76 mm x 45 mm
(cap 6 mm, ring 7 mm, base 32 mm)
*Capacity 100 g
*Material:
Cap/AS+ABS
Base/PS or AS
Ring/AS+ABS
Mirror/Glass
Sifter/PP
Label/OPP
*Description:
•Cap with mirror.
•A1 & A2 - Sifter with label sealed.

CH-T100W

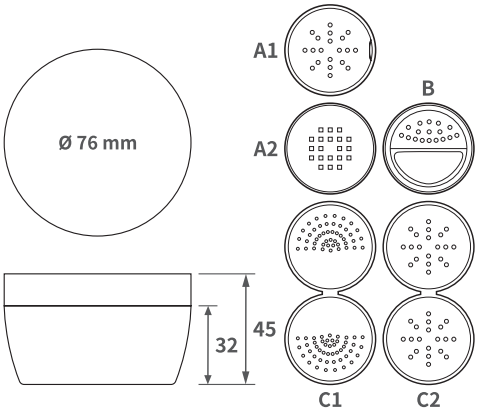

*Dimension:
Ø 76 mm x 45 mm
(cap 13 mm, base 32 mm)
*Capacity 100 g
*Material:
Cap/AS+ABS
Base/PS or AS
Sifter/PP
Label/OPP
*Description:
•A1 & A2 - Sifter with label sealed.
•B - Rotatable sifter.
•C1 & C2 - Double layer sifter, top sifter to close the meshes.

CH-T100X

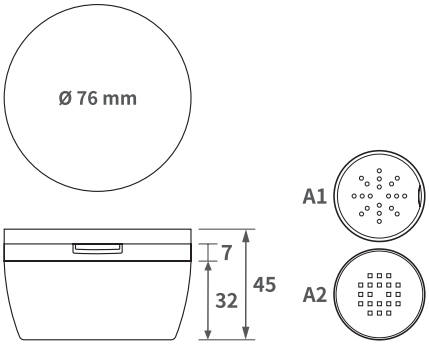

*Dimension:
Ø 76 mm x 45 mm
(cap 6 mm, ring 7 mm, base 32 mm)
*Capacity 100 g
*Material:
Cap/AS+ABS
Base/PS or AS
Ring/AS+ABS
Mirror/Glass
Sifter/PP
Label/OPP
*Description:
•Cap with mirror.
•A1 & A2 - Sifter with label sealed.

CH-T060

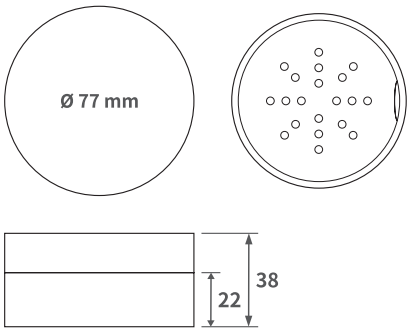

*Dimension:
Ø 77 mm x 38 mm
(cap 16 mm, base 22 mm)
*Capacity 60 g
*Material:
Cap/PMMA or ABS
Base/AS
Gasket/PE
Sifter/PE
Label/PVC
*Description:
Sifter with label sealed.

CH-T080

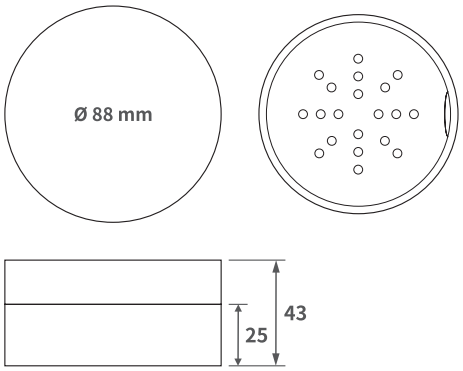

*Dimension:
Ø 88 mm x 43 mm
(cap 18 mm, base 25 mm)
*Capacity 80 g
*Material:
Cap/PMMA or ABS
Base/AS
Gasket/PE
Sifter/PE
Label/PVC
*Description:
Sifter with label sealed.

CH-T301

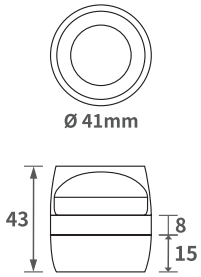

*Dimension:
Ø 41 mm x 43 mm
(cap 20 mm, ring 8 mm, base 15 mm)
*Capacity 4.5 g
*Material:
Cap/AS
Base/AS
Ring/ABS
Puff/Nylon
Sifter/PU
*Description:
•Rotatable sifter.
•Cap can be with or without mirror.

CH-T302

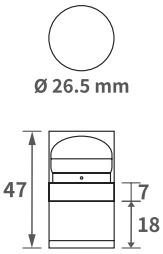

*Dimension:
Ø 26.5 mm x 47 mm
(cap 21.5mm, ring 7 mm, base 18 mm)
*Capacity 7 g
*Material:
Cap/AS or ABS
Base/PS or AS or PETG or PET
Ring/AS or ABS
Puff/Cotton

CH-T303

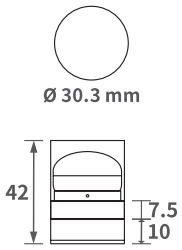

*Dimension:
Ø 30.3 mm x 42 mm
(cap 24.5 mm, ring 7.5 mm, base 10 mm)
*Capacity 5 g
*Material:
Cap/AS or ABS
Base/PS or AS or PETG or PET
Ring/AS or ABS
Puff/Cotton

CH-T305

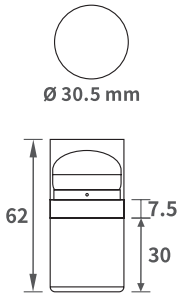

*Dimension:
Ø 30.5 mm x 62 mm
(cap 24.5 mm, ring 7.5 mm, base 30 mm)
*Capacity 12 g
*Material:
Cap/AS or ABS
Base/PS or AS or PETG or PET
Ring/AS or ABS
Puff/Cotton

CH-T306

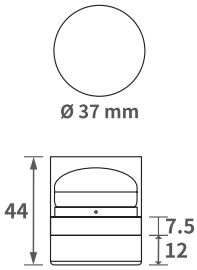

*Dimension:
Ø 37 mm x 44 mm
(cap 24.5 mm, ring 7.5 mm, base 12 mm)
*Capacity 10 g
*Material:
Cap/AS or ABS
Base/PS or AS or PETG or PET
Ring/AS or ABS
Puff/Cotton

CH-T307

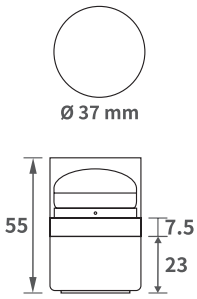

*Dimension:
Ø 37 mm x 55 mm
(cap 24.5 mm, ring 7.5 mm, base 23 mm)
*Capacity 18 g
*Material:
Cap/AS or ABS
Base/PS or AS or PETG or PET
Ring/AS or ABS
Puff/Cotton

CH-T308

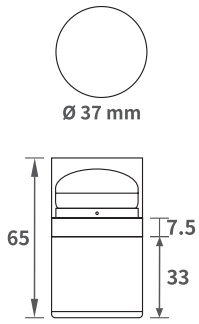

*Dimension:
Ø 37 mm x 65 mm
(cap 24.5 mm, ring 7.5 mm, base 33 mm)
*Capacity 25 g
*Material:
Cap/AS or ABS
Base/PS or AS or PETG or PET
Ring/AS or ABS
Puff/Cotton

CH-T309

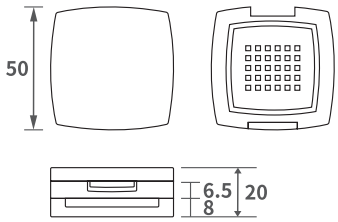

*Dimension:
50 mm x 50 mm x 20 mm
(cap 5.5 mm, ring 6.5 mm, base 8 mm)
*Capacity 5 g
*Material:
Cap/AS+ABS
Base/AS
Ring/AS+ABS
Mirror/Glass
Sifter/PP
Label/OPP
*Description:
Sifter with label sealed.

CH-T310

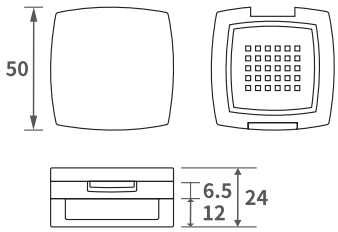

*Dimension:
50 mm x 50 mm x 24 mm
(cap 5.5 mm, ring 6.5 mm, base 12 mm)
*Capacity 10 g
*Material:
Cap/AS+ABS
Base/AS
Ring/AS+ABS
Mirror/Glass
Sifter/PP
Label/OPP
*Description:
Sifter with label sealed.

CH-T311

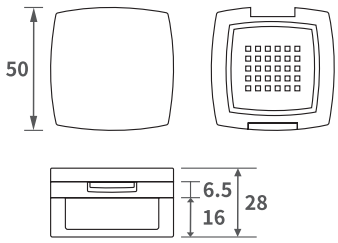

*Dimension:
50 mm x 50 mm x 28 mm
(cap 5.5 mm, ring 6.5 mm, base 16 mm)
*Capacity 15 g
*Material:
Cap/AS+ABS
Base/AS
Ring/AS+ABS
Mirror/Glass
Sifter/PP
Label/OPP
*Description:
Sifter with label sealed.