LIP GLOSS
MASCARA
EYE LINER
ROLLER

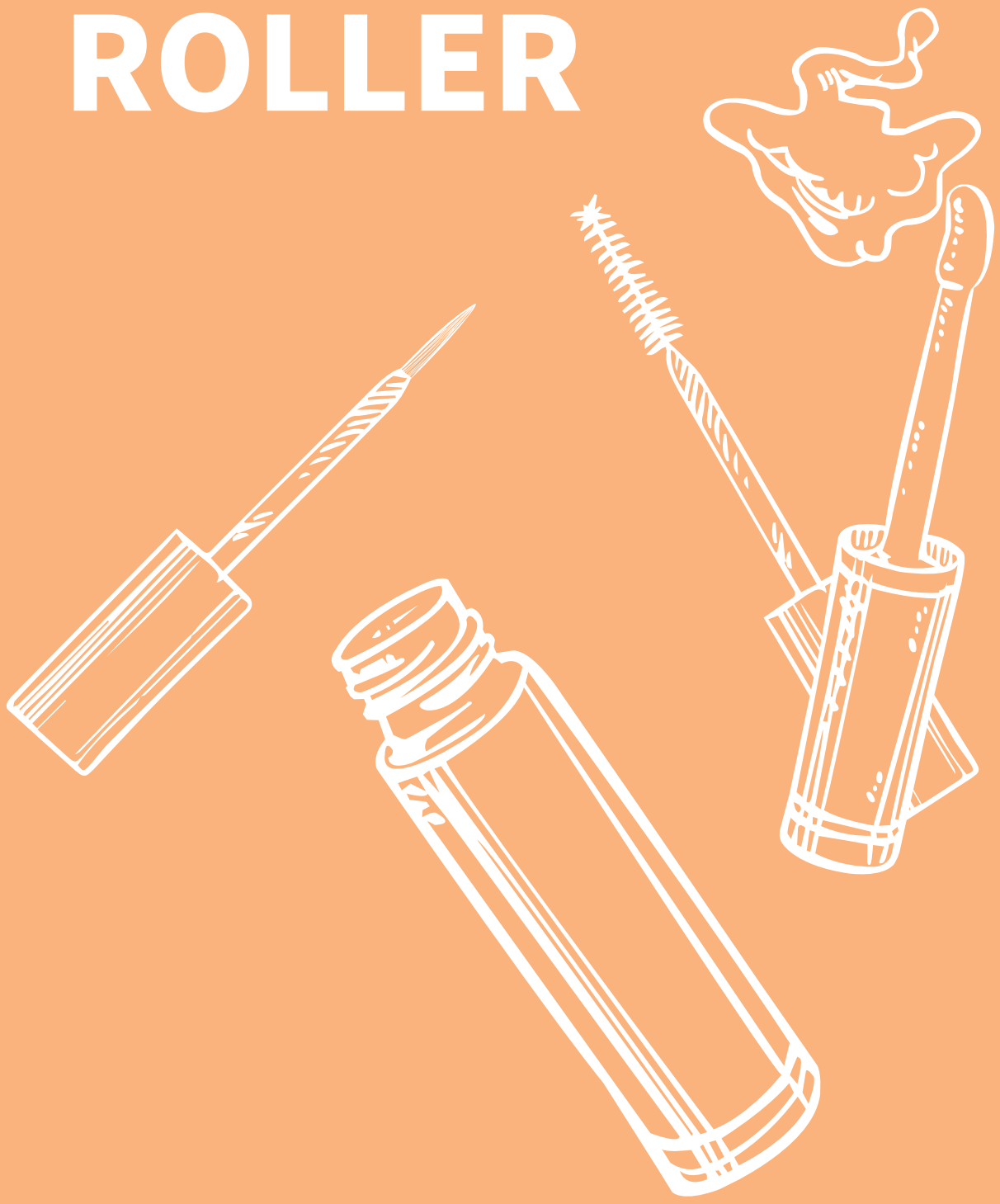

CH-G501

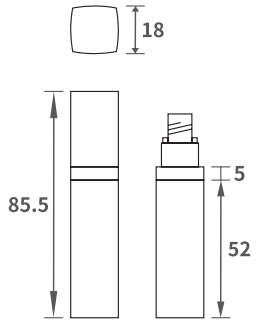

*Dimension:
18 mm x 18 mm x 85.5 mm
(cap 28.5 mm, neck 5mm, bottle 52mm)
*Capacity 7 ml
*Material:
Cap/AS+ABS
Bottle/AS (injection)
Neck/AS+ABS
Stem/POM
Wiper/TPE
Applicator/TPEE + flocked NYLON
*Description:
• Bottle with neck.
• Flocked applicator.

CH-G502

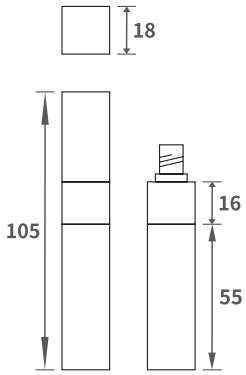

*Dimension:
18 mm x 18 mm x 105 mm
(cap 34 mm, neck 16 mm, bottle 55mm)
*Capacity 6.5 ml
*Material:
Cap/AS+ABS
Bottle/AS (injection)
Neck/AS+ABS
Stem/POM
Wiper/TPE
Applicator/TPEE + flocked NYLON
*Description:
• Bottle with neck.
• Flocked applicator.

CH-G503

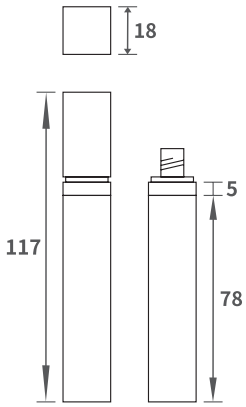

*Dimension:
18 mm x 18 mm x 117 mm
(cap 34 mm, neck 5 mm, bottle 78 mm)
*Capacity 8 ml
*Material:
Cap/AS+ABS
Bottle/AS (injection)
Neck/AS+ABS
Stem/POM
Wiper/TPE
Applicator/TPEE + flocked NYLON
*Description:
• Bottle with neck.
• Flocked applicator.

CH-G505

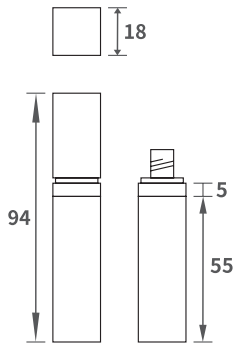

*Dimension:
18 mm x 18 mm x 94 mm
(cap 34 mm, neck 5 mm, bottle 55 mm)
*Capacity 6 ml
*Material:
Cap/AS+ABS
Bottle/AS (injection)
Neck/AS+ABS
Stem/POM
Wiper/TPE
Applicator/TPEE + flocked NYLON
*Description:
• Bottle with neck.
• Flocked applicator.

CH-G506

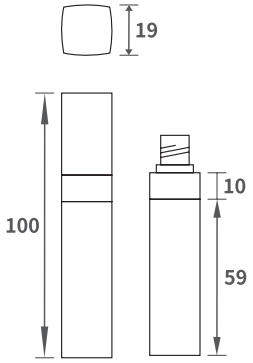

*Dimension:
19 mm x 19 mm x 100 mm
(cap 31 mm, neck 10 mm, bottle 59 mm)
*Capacity 7 ml
*Material:
Cap/AS+ABS
Bottle/AS (injection)
Neck/AS+ABS
Stem/POM
Wiper/TPE
Applicator/TPEE + flocked NYLON
*Description:
• Bottle with neck.
• Flocked applicator.

CH-G507 / M507

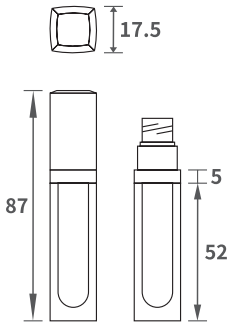

*Dimension:
17.5 mm x 17.5 mm x 87 mm
(cap 30 mm, neck 5 mm, bottle 52 mm)
*Capacity 6 ml
*Material:
Cap/AS+ABS
Bottle/AS or PS (injection)
Neck/AS+ABS
Stem/POM
Wiper/PE
Applicator/TPEE + flocked NYLON
Mascara/Stainless steel + brush NYLON
*Description:
• Bottle with neck.
Lip gloss / G507.
Mascara / M507.

CH-G508

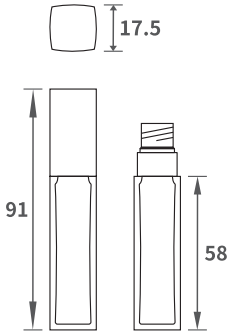

*Dimension:
17.5 mm x 17.5 mm x 91 mm
(cap 33 mm, bottle 58 mm)
*Capacity 8.5 ml
*Material:
Cap/PMMA (for injection color)
Cap/ABS (for spray or coating)
Bottle/PETG (injection)
Transparent stem/PETG
White stem/PP
Wiper/PE
Applicator/TPEE + flocked NYLON
*Description:
• Bottle 1 pc.
• Flocked applicator.

CH-G509 / M509

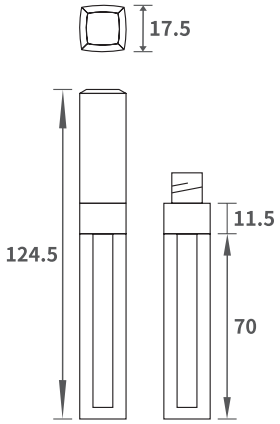

*Dimension:
17.5 mm x 17.5 mm x 124.5 mm
(cap 43mm, neck 11.5mm, bottle 70mm)
*Capacity 2.5 ml
*Material:
Cap/AS
Bottle/AS (injection)
Neck ring/AS
Stem/POM
Wiper/PE
Applicator/TPEE + flocked NYLON
Mascara/Stainless steel + brush NYLON
*Description:
• Bottle 1 pc with neck ring.
Lip gloss / G509.
Mascara / M509.

CH-G510

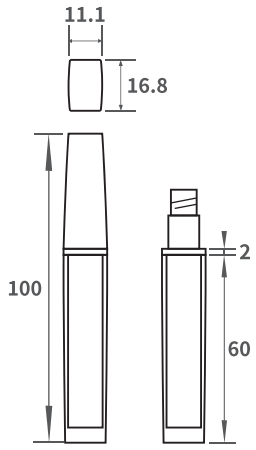

*Dimension:
16.8 mm x 11.1 mm x 100 mm
(cap 38 mm, neck 2 mm, bottle 60 mm)
*Capacity 6.5 ml
*Material:
Cap/AS+ABS
Bottle/AS (injection)
Neck/AS+ABS
Stem/POM
Wiper/PE
Applicator/TPEE + flocked NYLON
*Description:
•Bottle with neck.
•Flocked applicator.

CH-G511

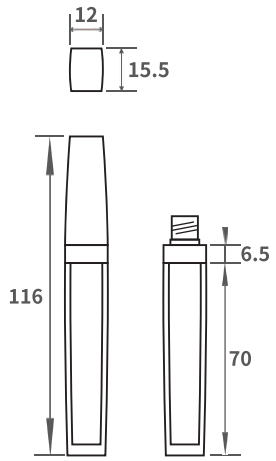

*Dimension:
15.5 mm x 12 mm x 116 mm
(cap 39.5mm,neck 6.5mm,bottle 70mm)
*Capacity 7.5 ml
*Material:
Cap/AS+ABS
Bottle/AS (injection)
Neck/AS+ABS
Stem/POM
Wiper/PE
Applicator/TPEE + flocked NYLON
*Description:
•Bottle with neck.
•Flocked applicator.

CH-G512

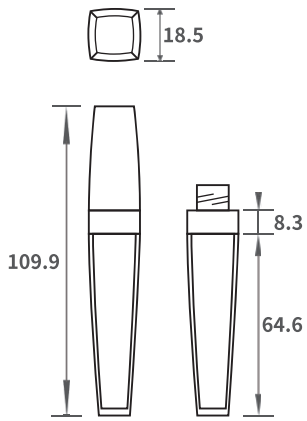

*Dimension:
18.5 mm x 18.5 mm x 109.9 mm
(cap 37mm,neck 8.3mm,bottle 64.6mm)
*Capacity 6.5 ml
*Material:
Cap/AS+ABS
Bottle/AS (injection)
Neck/AS+ABS
Stem/POM
Wiper/PE
Applicator/TPEE + flocked NYLON
*Description:
•Bottle with neck.
•Flocked applicator.

CH-G513 / M513

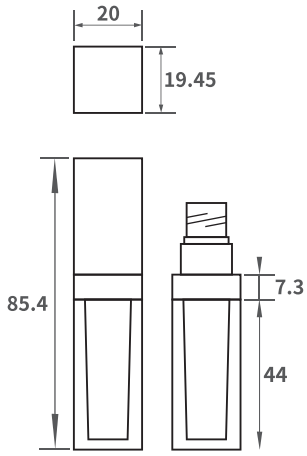

*Dimension:
20 mm x 19.45 mm x 85.4 mm
(cap 34.1mm,neck 7.3mm,bottle 44mm)
*Capacity 6 ml
*Material:
Cap/AS+ABS
Bottle/AS (injection)
Neck/AS+ABS
Stem/POM
Wiper/PE
Applicator/TPEE + flocked NYLON
Mascara/Stainless steel + brush NYLON
*Description:
•Bottle with neck.
Lip gloss / G513.
Mascara / M513.

CH-G515

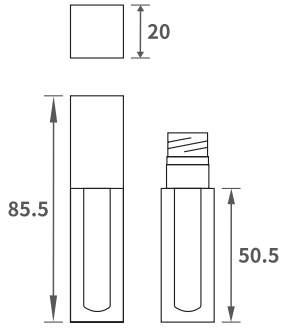

*Dimension:
20 mm x 20 mm x 85.5 mm
(cap 35 mm, bottle 50.5 mm)
*Capacity 4.5 ml
*Material:
Cap/PMMA (for injection color)
Cap/ABS (for spray or coating)
Bottle/PETG (injection)
Stem/PP
Wiper/PE
Applicator/TPEE + flocked NYLON
*Description:
• Bottle 1 pc.
• Flocked applicator.

CH-G516

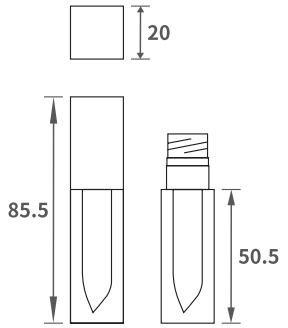

*Dimension:
20 mm x 20 mm x 85.5 mm
(cap 35 mm, bottle 50.5 mm)
*Capacity 4.5 ml
*Material:
Cap/PMMA (for injection color)
Cap/ABS (for spray or coating)
Bottle/PETG (injection)
Stem/PP
Wiper/PE
Applicator/TPEE + flocked NYLON
*Description:
• Bottle 1 pc.
• Flocked applicator.

CH-G517 / G517L

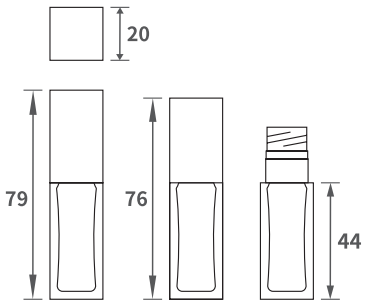

*Dimension:
20 mm x 20 mm x 76 mm/G517
(cap 32 mm, bottle 44 mm)
20 mm x 20 mm x 79 mm/G517L
(cap 35 mm, bottle 44 mm)
*Capacity 8 ml
*Material:
Cap/PMMA (for injection color)
Cap/ABS (for spray or coating)
Bottle/PETG (injection)
Stem/PP
Wiper/PE
Applicator/TPEE + flocked NYLON
*Description:
• Bottle 1 pc.
• Big size applicator.

CH-G518 / G518L

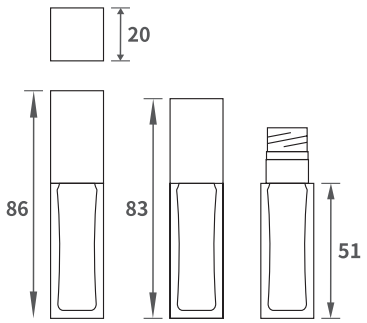

*Dimension:
20 mm x 20 mm x 83 mm/G518
(cap 32 mm, bottle 51 mm)
20 mm x 20 mm x 86 mm/G518L
(cap 35 mm, bottle 51 mm)
*Capacity 11 ml
*Material:
Cap/PMMA (for injection color)
Cap/ABS (for spray or coating)
Bottle/PETG (injection)
Stem/PP
Wiper/PE
Applicator/TPEE + flocked NYLON
*Description:
• Bottle 1 pc.
• Big size applicator.

CH-M519 / G519

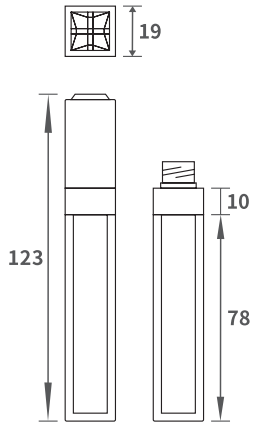

*Dimension:
19 mm x 19 mm x 123 mm
(cap 35 mm, neck 10 mm, bottle 78 mm)
*Capacity 11.5 ml
*Material:
Cap/AS+ABS
Bottle/AS (injection)
Neck/AS+ABS
Stem/POM
Wiper/TPE
Mascara/Stainless steel + brush PBT
Applicator/TPEE + flocked NYLON
Diamond piece/Acrylic
*Description:
• Bottle with neck.
• Diamond piece on top.
Mascara / M519.
Lip gloss / G519.

CH-G520

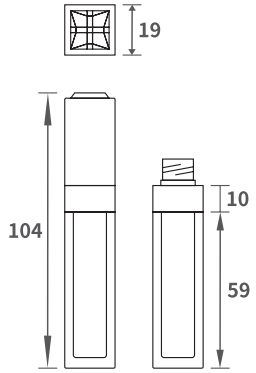

*Dimension:
19 mm x 19 mm x 104 mm
(cap 35 mm, neck 10 mm, bottle 59 mm)
*Capacity 7 ml
*Material:
Cap/AS+ABS
Bottle/AS (injection)
Neck/AS+ABS
Stem/POM
Wiper/TPE
Applicator/TPEE + flocked NYLON
Diamond piece/Acrylic
*Description:
• Bottle with neck.
• Diamond piece on top.
• Flocked applicator.

CH-G521

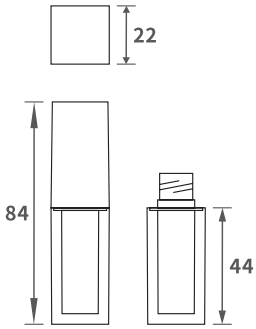

*Dimension:
22 mm x 22 mm x 84 mm
(cap 40 mm, bottle 44 mm)
*Capacity 7 ml
*Material:
Cap/AS+ABS
Bottle/AS (injection)
Neck/AS+ABS
Stem/POM
Wiper/LDPE
Applicator/TPEE + flocked NYLON
*Description:
• Bottle with neck.
• Flocked applicator.

CH-G523

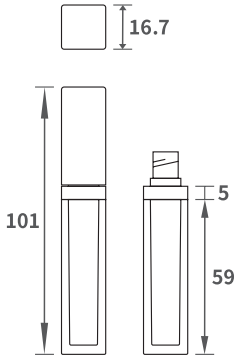

*Dimension:
16.7 mm x 16.7 mm x 101 mm
(cap 37 mm, neck 5 mm, bottle 59 mm)
*Capacity 7.3 ml
*Material:
Cap/AS+ABS
Bottle/AS (injection)
Neck/AS+ABS
Stem/POM
Wiper/PE
Applicator/TPEE + flocked NYLON
*Description:
• Bottle with neck.
• Flocked applicator.

CH-G525

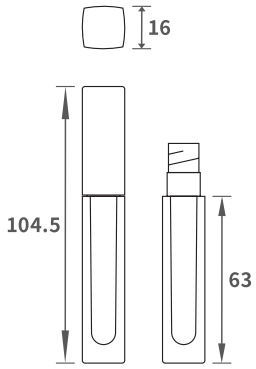

*Dimension:
16 mm x 16 mm x 104.5 mm
(cap 41 mm, bottle 63 mm)
*Capacity 3.4 ml
*Material:
Cap/AS+ABS
Bottle/PET (injection)
Stem/POM
Wiper/PE
Applicator/TPEE + flocked NYLON
*Description:
•Bottle 1 pc.
•Flocked applicator.

CH-G526

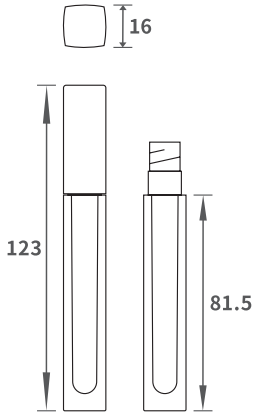

*Dimension:
16 mm x 16 mm x 123 mm
(cap 41 mm, bottle 81.5 mm)
*Capacity 3.8 ml
*Material:
Cap/AS+ABS
Bottle/PET (injection)
Stem/POM
Wiper/PE
Applicator/TPEE + flocked NYLON
*Description:
•Bottle 1 pc.
•Flocked applicator.

CH-E527 / G527

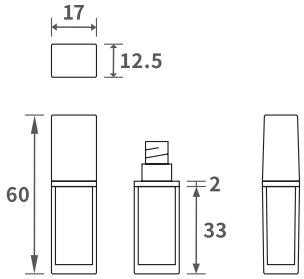

*Dimension:
17 mm x 12.5 mm x 60 mm
(cap 25 mm, neck 2 mm, bottle 33 mm)
*Capacity 3 ml
*Material:
Cap/AS+ABS
Bottle/AS (injection)
Neck/AS+ABS
Stem/POM
Wiper/PE
Eyeliner/Brush NYLON
Applicator/TPEE + flocked NYLON
*Description:
•Bottle with neck.
Eyeliner / E527.
Lip gloss / G527.

CH-M528 / G528

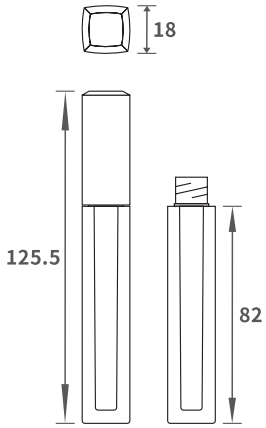

*Dimension:
18 mm x 18 mm x 125.5 mm
(cap 43 mm, bottle 82 mm)
*Capacity 2.5 ml
*Material:
Cap/AS+ABS
Bottle/AS (injection)
Stem/POM
Wiper/PE
Mascara/Stainless steel + brush NYLON
Applicator/TPEE + flocked NYLON
*Description:
•Bottle 1 pc.
Mascara / M528.
Lip gloss / G528.

CH-G601

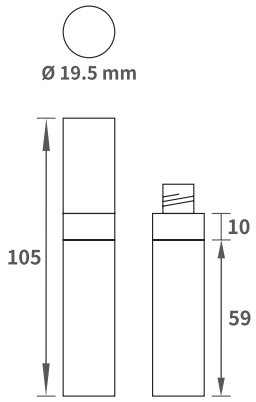

*Dimension:
Ø 19.5 mm x 105 mm
(cap 36 mm, neck 10 mm, bottle 59mm)
*Capacity 7.5 ml
*Material:
Cap/AS+ABS
Bottle/AS (injection)
Neck/AS+ABS
Stem/POM
Wiper/TPE
Applicator/TPEE + flocked NYLON
*Description:
• Bottle with neck.
• Flocked applicator.

CH-G602

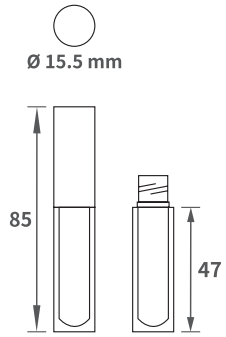

*Dimension:
Ø 15.5 mm x 85 mm
(cap 38 mm, bottle 47 mm)
*Capacity 2.5 ml
*Material:
Cap/PMMA (for injection color)
Cap/ABS (for spray or coating)
Bottle/PETG (injection)
Transparent stem/PETG
White stem/PP
Wiper/PE
Applicator/TPEE + flocked NYLON
*Description:
• Bottle 1 pc.
• Flocked applicator.

CH-G603 / M603 / E603

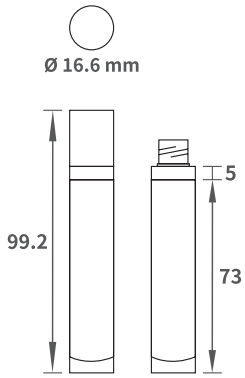

*Dimension:
Ø 16.6 mm x 99.2 mm
(cap 21.2 mm, neck 5mm, bottle 73mm)
*Capacity 5.9 ml
*Material:
Cap/AS+ABS
Bottle/AS (injection)
Neck/AS+ABS
Stem/POM
Wiper/PE
Applicator/TPEE + flocked NYLON
Mascara/Stainless steel + brush NYLON
Eyeliner/Brush NYLON
*Description:
• Bottle with neck.
Lip gloss / G603.
Mascara / M603.
Eyeliner / E603.

CH-G605

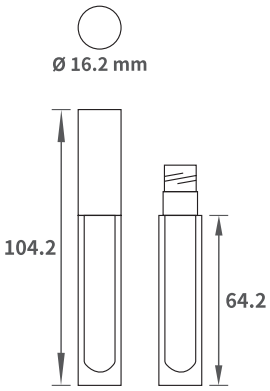

*Dimension:
Ø 16.2 mm x 104.2 mm
(cap 40 mm, bottle 64.2 mm)
*Capacity 3 ml
*Material:
Cap/AS+ABS
Bottle/PETG (injection)
Stem/POM
Wiper/PE
Applicator/TPEE + flocked NYLON
*Description:
• Bottle 1 pc.
• Flocked applicator.

CH-G606

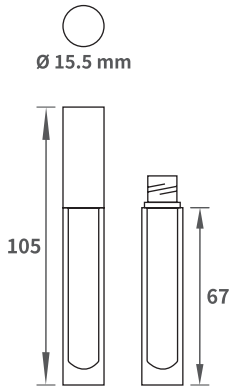

*Dimension:
Ø 15.5 mm x 105 mm
(cap 38 mm, bottle 67 mm)
*Capacity 3 ml
*Material:
Cap/PMMA (for injection color)
Cap/ABS (for spray or coating)
Bottle/PETG (injection)
Transparent stem/PETG
White stem/PP
Wiper/PE
Applicator/TPEE + flocked NYLON
*Description:
•Bottle 1 pc.
•Flocked applicator.

CH-G607 / M607

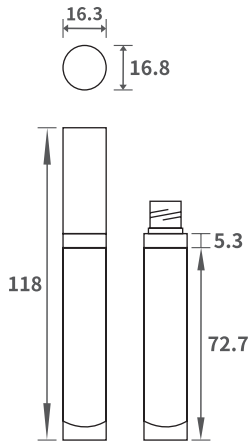

*Dimension:
16.8 mm x 16.3 mm x 118 mm
(cap 40mm,neck 5.3mm, bottle 72.7mm)
*Capacity 5.7 ml
*Material:
Cap/AS+ABS
Bottle/AS (injection)
Neck/AS+ABS
Stem/POM
Wiper/PE
Applicator/TPEE + flocked NYLON
Mascara/Stainless steel + brush NYLON
*Description:
•Bottle with neck.
Lip gloss / G607.
Mascara / M607.

CH-G608

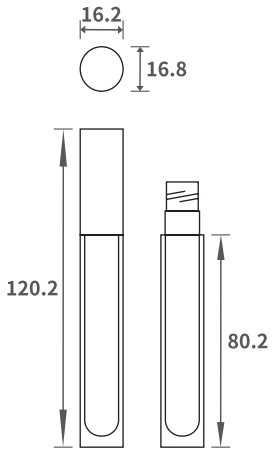

*Dimension:
16.8 mm x 16.2 mm x 120.2 mm
(cap 40 mm, bottle 80.2 mm)
*Capacity 3.8 ml
*Material:
Cap/AS+ABS
Bottle/PETG (injection)
Stem/POM
Wiper/PE
Applicator/TPEE + flocked NYLON
*Description:
•Bottle 1 pc.
•Flocked applicator.

CH-G609 / M609

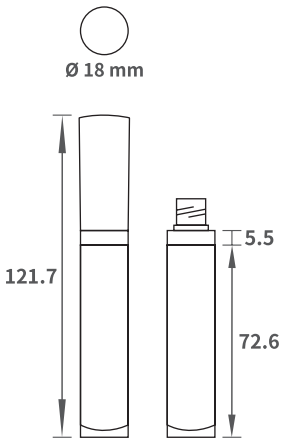

*Dimension:
Ø 18 mm x 121.7 mm
(cap 43.6 mm,neck 5.5 mm,bottle 72.6mm)
*Capacity 5.9 ml
*Material:
Cap/AS+ABS
Bottle/AS (injection)
Neck/AS+ABS
Stem/POM
Wiper/PE
Applicator/TPEE + flocked NYLON
Mascara/Stainless steel + brush NYLON
*Description:
•Bottle with neck.
Lip gloss / G609.
Mascara / M609.

CH-G610

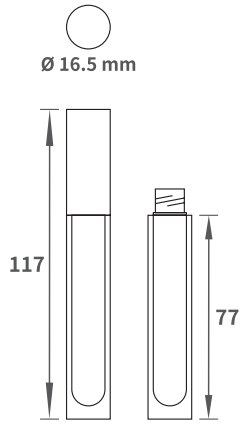

*Dimension:
Ø 16.5 mm x 117 mm
(cap 40 mm, bottle 77 mm)
*Capacity 4 ml
*Material:
Cap/PETG
Bottle/PETG (injection)
Stem/PETG
Wiper/PE
Applicator/TPEE + flocked NYLON
*Description:
•Bottle 1 pc.
•Flocked applicator.

CH-G611

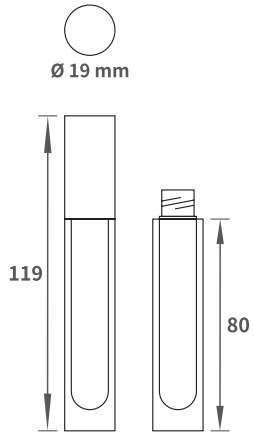

*Dimension:
Ø 19 mm x 119 mm
(cap 39 mm, bottle 80 mm)
*Capacity 4 ml
*Material:
Cap/PETG
Bottle/PETG (injection)
Stem/PETG
Wiper/PE
Applicator/TPEE + flocked NYLON
*Description:
•Bottle 1 pc.
•Flocked applicator.

CH-G612A/G612B

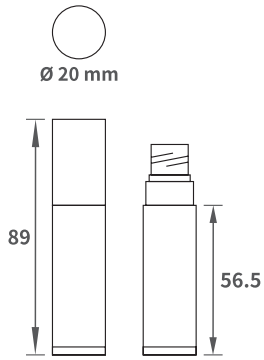

*Dimension:
Ø 20 mm x 89 mm
(cap 32.5 mm, bottle 56.5 mm)
*Capacity 8 ml
*Material:
Cap/PMMA (for injection color)
Cap/ABS (for spray or coating)
Bottle/PETG (injection)
Stem/PP
Wiper/PE
Applicator/TPEE + flocked NYLON
*Description:
•Bottle 1 pc.
•Big size applicator.

CH-G613

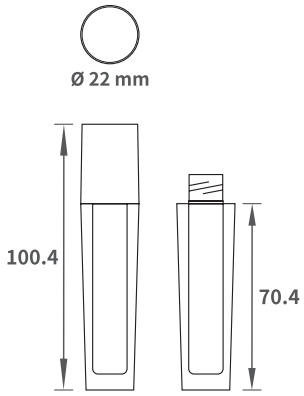

*Dimension:
Ø 22 mm x 100.4 mm
(cap 30 mm, bottle 70.4 mm)
*Capacity 3.5 ml
*Material:
Cap/AS
Bottle/AS (injection)
Stem/POM
Wiper/PE
Applicator/TPEE + flocked NYLON
*Description:
•Bottle 1 pc.
•Flocked applicator.

CH-G618A / G618B

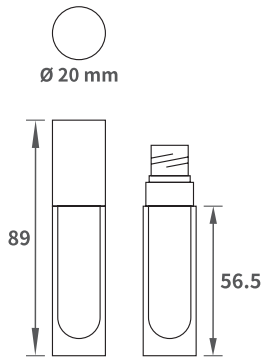

*Dimension:
Ø 20 mm x 89 mm
(cap 32.5 mm, bottle 56.5 mm)
*Capacity 4 ml
*Material:
Cap/PMMA (for injection color)
Cap/ABS (for spray or coating)
Bottle/PETG (injection)
Stem/PP
Wiper/PE
Applicator/TPEE + flocked NYLON
*Description:
• Bottle 1 pc.
• Big size applicator.

CH-G619

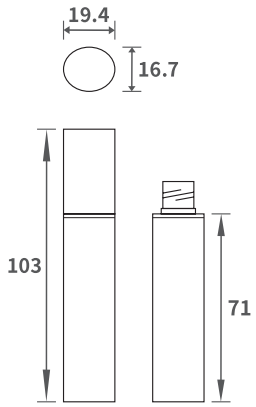

*Dimension:
19.4 mm x 16.7 mm x 103 mm
(cap 32 mm, bottle 71 mm)
*Capacity 8.5 ml
*Material:
Cap/AS+ABS
Bottle/AS (injection)
Neck/AS
Stem/PETG
Wiper/TPE
Applicator/TPEE + flocked NYLON
*Description:
• Bottle with neck.
• Flocked applicator.

CH-G620

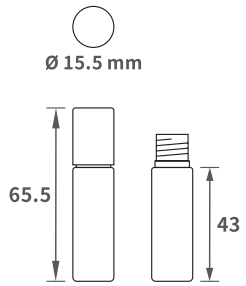

*Dimension:
Ø 15.5 mm x 65.5 mm
(cap 21.5 mm, bottle 43 mm)
*Capacity 5 ml
*Material:
Cap/AS
Bottle/AS (injection)
Stem/POM
Wiper/PE
Applicator/TPEE + flocked NYLON
*Description:
• Bottle 1 pc.
• Flocked applicator.

CH-G621

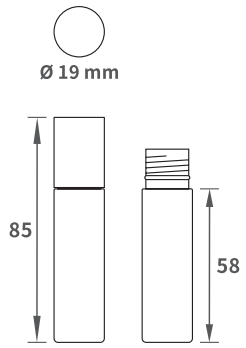

*Dimension:
Ø 19 mm x 85 mm
(cap 26.5 mm, bottle 58 mm)
*Capacity 5 ml
*Material:
Cap/AS
Bottle/AS (injection)
Stem/POM
Wiper/PE
Applicator/TPEE + flocked NYLON
*Description:
• Bottle 1 pc.
• Flocked applicator.

CH-G522

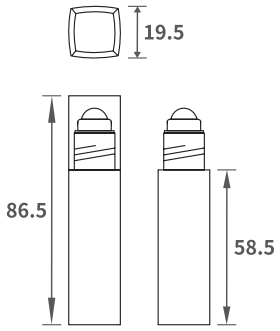

*Dimension:
19.5 mm x 19.5 mm x 86.5 mm
(cap 28 mm, bottle 58.5 mm)
*Capacity 5 ml
*Material:
Cap/AS
Bottle/AS (injection)
Roller/PP
Seat/PE
*Description:
•Roller can be for powder or oil.

CH-G615

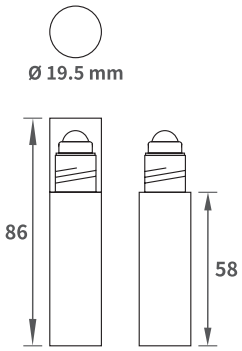

*Dimension:
Ø 19.5 mm x 86 mm
(cap 28 mm, bottle 58 mm)
*Capacity 10 ml
*Material:
Cap/AS
Bottle/AS (injection)
Roller/PP
Seat/PE
*Description:
•Roller can be for powder or oil.

CH-G616

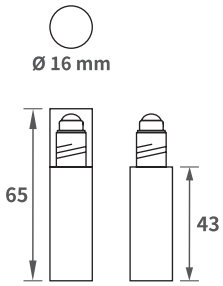

*Dimension:
Ø 16 mm x 65 mm
(cap 22 mm, bottle 43 mm)
*Capacity 5 ml
*Material:
Cap/PS
Bottle/AS (injection)
Roller/PP
Seat/PE
*Description:
•Roller can be for powder or oil.

CH-G617A / G617P

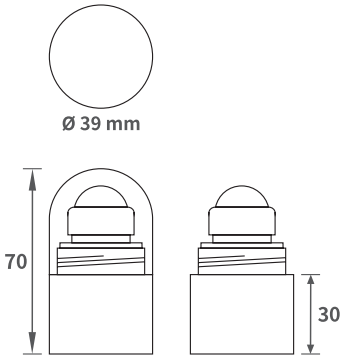

*Dimension:
Ø 39 mm x 70 mm
(cap 40 mm, bottle 30 mm)
*Capacity 30 ml
*Material:
Cap/AS or PS
Bottle/AS or PS(injection)
Roller/PP
Seat/PE
*Description:
•AS material/G617A
•PS material/G617P
•Roller can be for powder or oil.

CH-G301 / M301 / E301

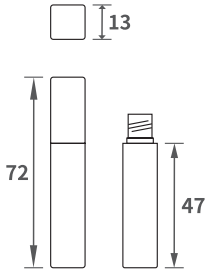

*Dimension:
13 mm x 13 mm x 72 mm
(cap 25 mm, bottle 47 mm)
*Capacity 5 ml
*Material:
Cap/AS+ABS
Bottle/PETG (blow)
Stem/POM
Wiper/PE
Applicator/TPEE + flocked NYLON
Mascara/Stainless steel + brush NYLON
Eyeliner/Brush NYLON
*Description:
Lip gloss / G301.
Mascara / M301.
Eyeliner / E301.

CH-G302 / M302 / E302

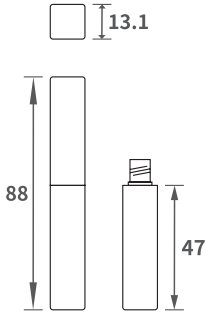

*Dimension:
13.1 mm x 13.1 mm x 88 mm
(cap 41 mm, bottle 47 mm)
*Capacity 5 ml
*Material:
Cap/AS+ABS
Bottle/PETG (blow)
Stem/POM
Wiper/PE
Applicator/TPEE + flocked NYLON
Mascara/Stainless steel + brush NYLON
Eyeliner/Brush NYLON
*Description:
Lip gloss / G302.
Mascara / M302.
Eyeliner / E302.

CH-G303 / M303

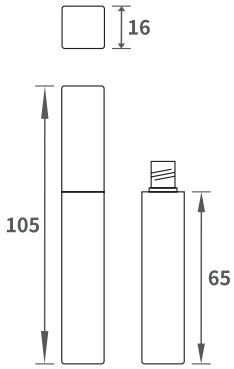

*Dimension:
16 mm x 16 mm x 105 mm
(cap 40 mm, bottle 65 mm)
*Capacity 12 ml
*Material:
Cap/AS+ABS
Bottle/PETG (blow)
Stem/PP
Wiper/PE
Applicator/TPEE + flocked NYLON
Mascara/Stainless steel + brush NYLON
*Description:
Lip gloss / G303.
Mascara / M303.

CH-G305 / M305

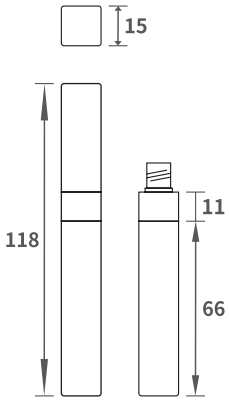

*Dimension:
15 mm x 15 mm x 118 mm
(cap 41 mm, neck 11 mm, bottle 66 mm)
*Capacity 10 ml
*Material:
Cap/AS+ABS
Bottle/PETG (blow)
Neck ring/ABS
Stem/POM
Wiper/PE
Applicator/TPEE + flocked NYLON
Mascara/Stainless steel + brush NYLON
*Description:
• Bottle with neck ring.
Lip gloss / G305.
Mascara / M305.

CH-M306

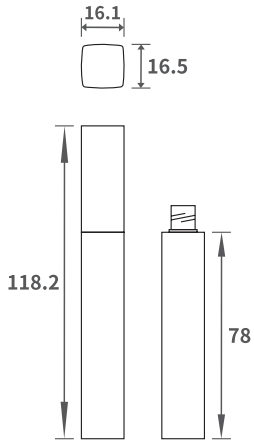

*Dimension:
16.5 mm x 16.1 mm x 118.2 mm
(cap 40.2 mm, bottle 78 mm)
*Capacity 15 ml
*Material:
Cap/AS+ABS
Bottle/PETG (blow)
Stem/PP
Wiper/PE
Mascara/Stainless steel + brush NYLON
*Description:
Mascara.

CH-M307 / G307 / E307

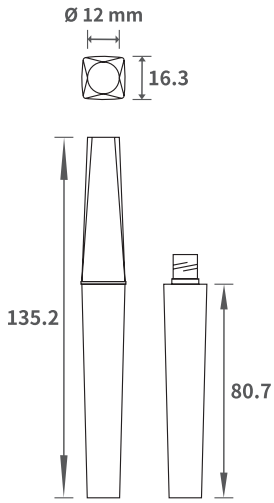

*Dimension:
16.3 mm x 16.3 mm x 135.2 mm
(cap 54.5 mm, bottle 80.7 mm)
*Capacity 13 ml
*Material:
Cap/AS+ABS
Bottle/PETG (blow)
Stem/PP
Wiper/PE
Mascara/Stainless steel + brush NYLON
Applicator/TPEE + flocked NYLON
Eyeliner/Brush NYLON
*Description:
Mascara / M307.
Lip gloss / G307.
Eyeliner / E307.

CH-G308 / M308 / E308

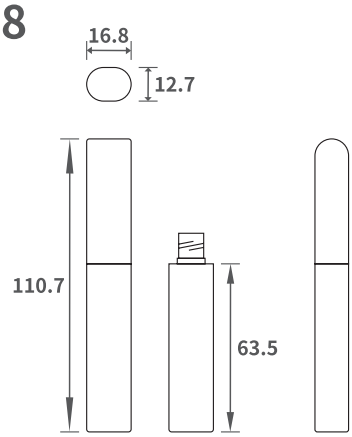

*Dimension:
16.8 mm x 12.7 mm x 110.7 mm
(cap 47.2 mm, bottle 63.5 mm)
*Capacity 9 ml
*Material:
Cap/AS+ABS
Bottle/PETG (blow)
Stem/POM
Wiper/PE
Applicator/TPEE + flocked NYLON
Mascara/Stainless steel + brush NYLON
Eyeliner/Brush NYLON
*Description:
Lip gloss / G308.
Mascara / M308.
Eyeliner / E308.

CH-M309 / G309 / E309

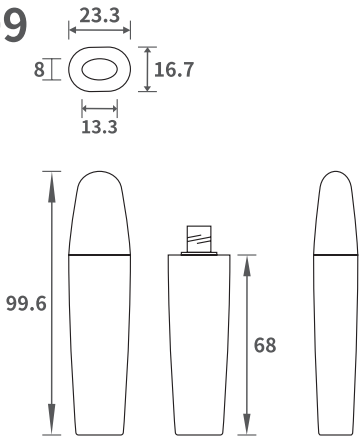

*Dimension:
23.3 mm x 16.7 mm x 99.6 mm
(cap 31.6 mm, bottle 68 mm)
*Capacity 12.6 ml
*Material:
Cap/AS+ABS
Bottle/PETG (blow)
Stem/PP
Wiper/PE
Mascara/Stainless steel + brush NYLON
Applicator/TPEE + flocked NYLON
Eyeliner/Brush NYLON
*Description:
Mascara / M309.
Lip gloss / G309.
Eyeliner / E309.

CH-M310

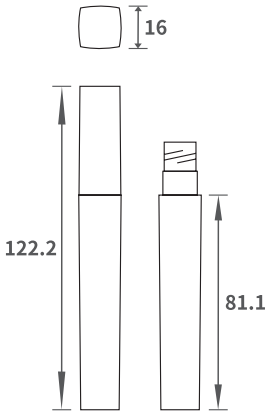

*Dimension:
16 mm x 16 mm x 122.2 mm
(cap 41.1 mm, bottle 81.1 mm)
*Capacity 11 ml
*Material:
Cap/AS+ABS
Bottle/PETG (blow)
Stem/POM
Wiper/PE
Mascara/Stainless steel + brush NYLON
*Description:
Mascara.

CH-M311 / G311 / E311

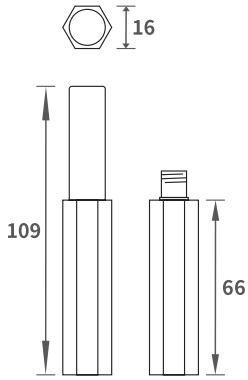

*Dimension:
cap Ø 13.6 mm x 43 mm
bottle 16 mm x 16 mm x 66 mm
*Capacity 12 ml
*Material:
Cap/AS or aluminum
Bottle/PETG (blow)
Stem/PP
Wiper/PE
Mascara/Stainless steel + brush NYLON
Applicator/TPEE + flocked NYLON
Eyeliner/Brush NYLON
*Description:
Mascara / M311.
Lip gloss / G311.
Eyeliner / E311.

CH-E312 / G312 / M312

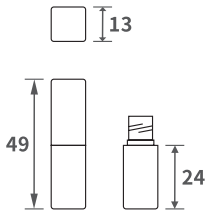

*Dimension:
13 mm x 13 mm x 49 mm
(cap 25 mm, bottle 24 mm)
*Capacity 2.8 ml
*Material:
Cap/AS+ABS
Bottle/PETG (blow)
Stem/POM
Wiper/PE
Eyeliner/Brush NYLON
Applicator/TPEE + flocked NYLON
Mascara/Stainless steel + brush NYLON
*Description:
Eyeliner / E312.
Lip gloss / G312.
Mascara / M312.

CH-G313

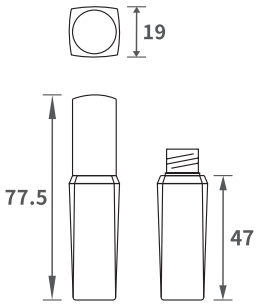

*Dimension:
cap Ø 16.5 mm x 30.5 mm
bottle 19 mm x 19 mm x 47 mm
*Capacity 7 ml
*Material:
Cap/Aluminum
Bottle/PETG (blow)
Stem/POM
Wiper/PE
Applicator/TPEE + flocked NYLON
*Description:
• Lip gloss.
• Flocked applicator.

CH-G201

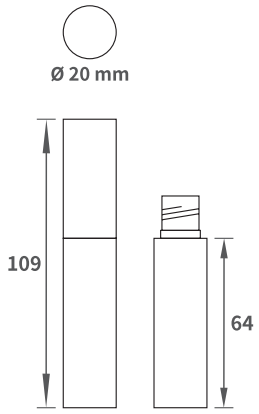

*Dimension:
Ø 20 mm x 109 mm
(cap 45 mm, bottle 64 mm)
*Capacity 15 ml
*Material:
Cap/AS+ABS
Bottle/PETG (blow)
Stem/POM
Wiper/TPE
Applicator/TPEE + flocked NYLON
*Description:
• Lip gloss.
• Big size applicator.

CH-G202 / G202P

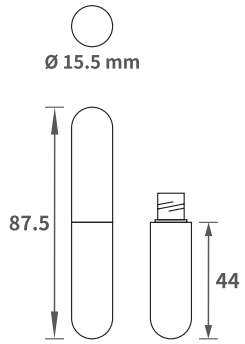

*Dimension:
Ø 15.5 mm x 87.5 mm
(cap 43.5 mm, bottle 44 mm)
*Capacity 5 ml
*Material:
Cap/ABS (G202P)
Cap/Aluminum (G202)
Bottle/PETG (blow)
Stem/POM
Wiper/PE
Applicator/TPEE + flocked NYLON
*Description:
• Lip gloss.
• Flocked applicator.

CH-G203 / M203 / E203

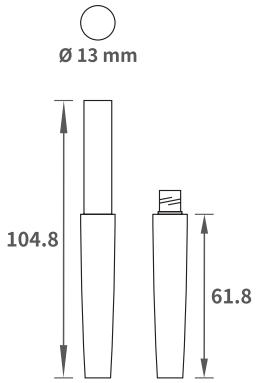

*Dimension:
Ø 13 mm x 104.8 mm
(cap 43 mm, bottle 61.8 mm)
*Capacity 8.8 ml
*Material:
Cap/AS+ABS
Bottle/PETG (blow)
Stem/PP
Wiper/PE
Applicator/TPEE + flocked NYLON
Mascara/Stainless steel
+ brush NYLON
Eyeliner/Brush NYLON
*Description:
Lip gloss / G203.
Mascara / M203.
Eyeliner / E203.

CH-G205 / M205 / E205

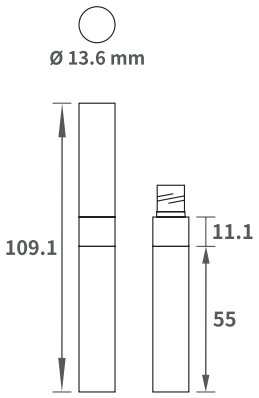

*Dimension:
Ø 13.6 mm x 109.1 mm
(cap 43mm,neck 11.1mm, bottle 55mm)
*Capacity 9 ml
*Material:
Cap/Aluminum
Bottle/PETG (blow)
Neck ring/Aluminum
Stem/PP
Wiper/PE
Applicator/TPEE + flocked NYLON
Mascara/Stainless steel + brush NYLON
Eyeliner/Brush NYLON
*Description:
• Bottle with neck ring.
Lip gloss / G205.
Mascara / M205.
Eyeliner / E205.

CH-G206 / M206 / E206

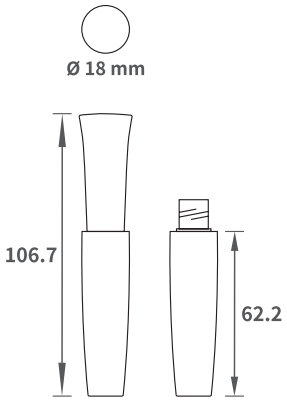

*Dimension:
Ø 18 mm x 106.7 mm
(cap 44.5 mm, bottle 62.2 mm)
*Capacity 7 ml
*Material:
Cap/AS+ABS
Bottle/PETG (blow)
Stem/PP
Wiper/PE
Applicator/TPEE + flocked NYLON
Mascara/Stainless steel + brush NYLON
Eyeliner/Brush NYLON
*Description:
Lip gloss / G206.
Mascara / M206.
Eyeliner / E206.

CH-G207 / M207 / E207

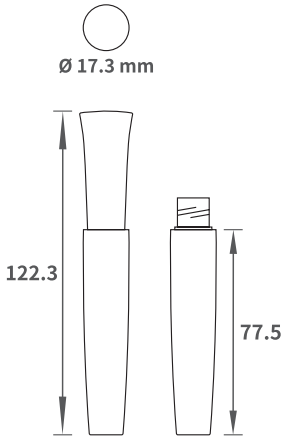

*Dimension:
Ø 17.3 mm x 122.3 mm
(cap 44.8 mm, bottle 77.5 mm)
*Capacity 7 ml
*Material:
Cap/AS+ABS
Bottle/PETG (blow)
Stem/PP
Wiper/PE
Applicator/TPEE + flocked NYLON
Mascara/Stainless steel + brush NYLON
Eyeliner/Brush NYLON
*Description:
Lip gloss / G207.
Mascara / M207.
Eyeliner / E207.

CH-M208

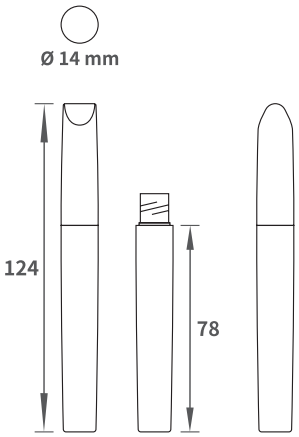

*Dimension:
Ø 14 mm x 124 mm
(cap 46 mm, bottle 78 mm)
*Capacity 12 ml
*Material:
Cap/AS+ABS
Bottle/PETG (blow)
Stem/PP
Wiper/PE
Mascara/Stainless steel + brush NYLON
*Description:
Mascara.

CH-M209

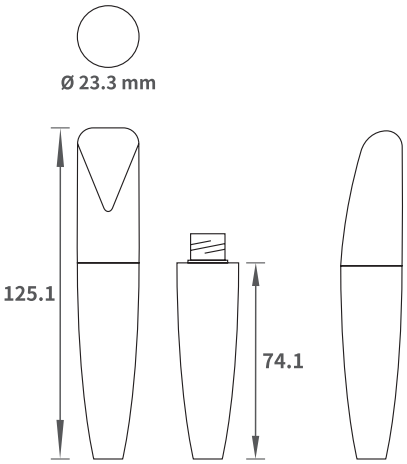

*Dimension:
Ø 23.3 mm x 125.1 mm
(cap 50.5 mm, neck gap 0.5 mm,
bottle 74.1mm)
*Capacity 16 ml
*Material:
Cap/AS+ABS
Bottle/PETG (blow)
Stem/POM
Wiper/PE
Mascara/Stainless steel + brush NYLON
*Description:
Mascara.

CH-M210

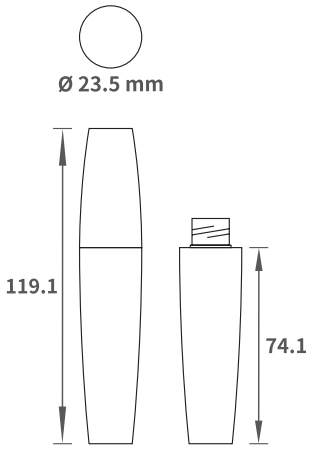

*Dimension:
Ø 23.5 mm x 119.1 mm
(cap 45 mm, bottle 74.1 mm)
*Capacity 13 ml
*Material:
Cap/AS+ABS
Bottle/PETG (blow)
Stem/POM
Wiper/PE
Mascara/Stainless steel + brush NYLON
*Description:
Mascara.

CH-M211

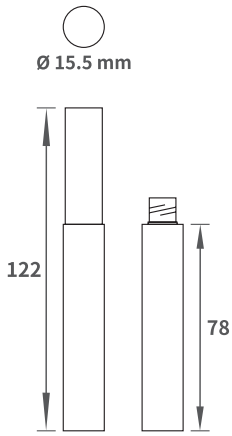

*Dimension:
Ø 15.5 mm x 122 mm
(cap 44 mm, bottle 78 mm)
*Capacity 12 ml
*Material:
Cap/AS
Bottle/PETG (blow)
Stem/PP
Wiper/PE
Mascara/Stainless steel + brush NYLON
*Description:
Mascara.

CH-M212

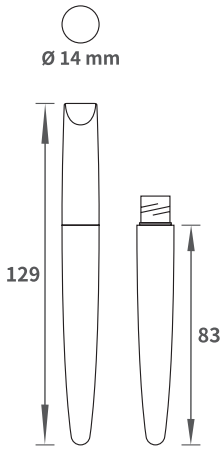

*Dimension:
Ø 14 mm x 129 mm
(cap 46 mm, bottle 83 mm)
*Capacity 11 ml
*Material:
Cap/AS+ABS
Bottle/PETG (blow)
Stem/PP
Wiper/PE
Mascara/Stainless steel + brush NYLON
*Description:
Mascara.

CH-E213 / G213 / M213

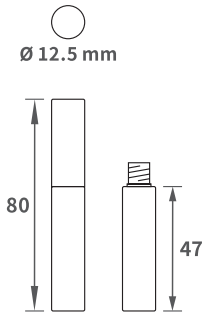

*Dimension:
Ø 12.5 mm x 80 mm
(cap 33 mm, bottle 47 mm)
*Capacity 4 ml
*Material:
Cap/AS
Bottle/PETG (blow)
Stem/PP
Wiper/PE
Eyeliner/Brush NYLON
Applicator/TPEE + flocked NYLON
Mascara/Stainless steel + brush NYLON
*Description:
Eyeliner / E213.
Lip gloss / G213.
Mascara / M213.

CH-E215 / G215

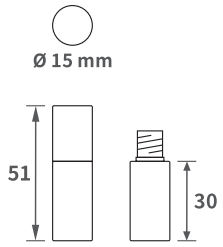

*Dimension:
Ø 15 mm x 51 mm
(cap 21 mm, bottle 30 mm)
*Capacity 4 ml
*Material:
Cap/AS+ABS
Bottle/PETG (blow)
Stem/PP
Wiper/PE
Eyeliner/Brush NYLON
Applicator/TPEE + flocked NYLON
*Description:
Eyeliner / E215.
Lip gloss / G215.

CH-E216 / G216 / M216

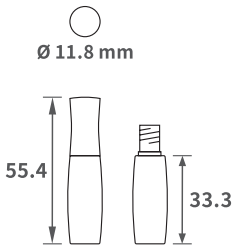

*Dimension:
Ø 11.8 mm x 55.4 mm
(cap 22.1 mm, bottle 33.3 mm)
*Capacity 2 ml
*Material:
Cap/ABS
Bottle/PETG (blow)
Stem/PP
Wiper/PE
Eyeliner/Brush NYLON
Applicator/TPEE + flocked NYLON
Mascara/Stainless steel + brush NYLON
*Description:
Eyeliner / E216.
Lip gloss / G216.
Mascara / M216.

CH-E217 / G217 / M217

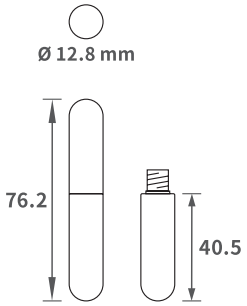

*Dimension:
Ø 12.8 mm x 76.2 mm
(cap 35.7 mm, bottle 40.5 mm)
*Capacity 3.5 ml
*Material:
Cap/Aluminum
Bottle/PETG (blow)
Stem/PP
Wiper/PE
Eyeliner/Brush NYLON
Applicator/TPEE + flocked NYLON
Mascara/Stainless steel + brush NYLON
*Description:
Eyeliner / E217.
Lip gloss / G217.
Mascara / M217.

CH-G218 / M218 / E218

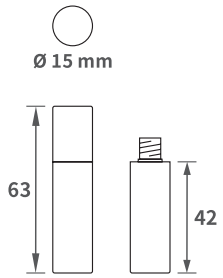

*Dimension:
Ø 15 mm x 63 mm
(cap 21 mm, bottle 42 mm)
*Capacity 5.5 ml
*Material:
Cap/AS+ABS
Bottle/PETG (blow)
Stem/PP
Wiper/PE
Applicator/TPEE + flocked NYLON
Mascara/Stainless steel + brush NYLON
Eyeliner/Brush NYLON
*Description:
Lip gloss / G218.
Mascara / M218.
Eyeliner / E218.

CH-G101 / M101 / E101

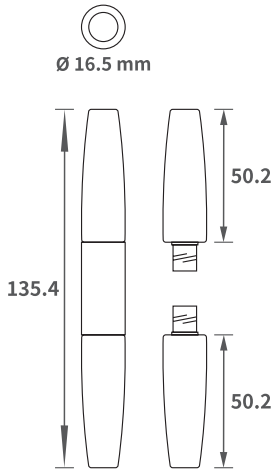

*Dimension:
Ø 16.5 mm x 135.4 mm
(cap 35 mm, bottle 50.2 mm)
*Capacity 7 ml + 7 ml
*Material:
Cap/Aluminum
Bottle/PETG (blow)
Stem/POM
Wiper/PE
Applicator/TPEE + flocked NYLON
Mascara/Stainless steel + brush NYLON
Eyeliner/Brush NYLON
*Description:
Lip gloss / G101.
Mascara / M101.
Eyeliner / E101.

CH-G102

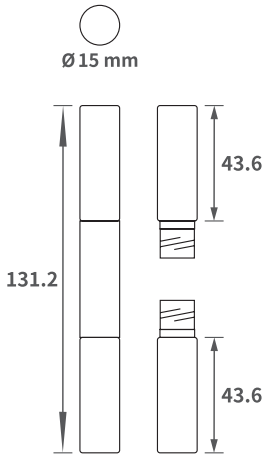

*Dimension:
Ø 15 mm x 131.2 mm
(cap 44 mm, bottle 43.6 mm)
*Capacity 5 ml + 5 ml
*Material:
Cap/Aluminum
Bottle/AS (injection)
Stem/POM
Wiper/PE
Applicator/TPEE + flocked NYLON
*Description:
• Lip gloss.
• Flocked applicator.

CH-G103 / M103 / E103

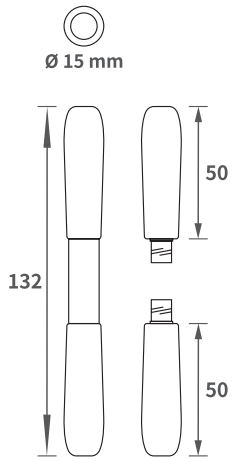

*Dimension:
Ø 15 mm x 132 mm
(cap 32 mm, bottle 50 mm)
*Capacity 9 ml + 9 ml
*Material:
Cap/Aluminum
Bottle/PETG (blow)
Stem/PP
Wiper/PE
Applicator/TPEE + flocked NYLON
Mascara/Stainless steel + brush NYLON
Eyeliner/Brush NYLON
*Description:
Lip gloss / G103.
Mascara / M103.
Eyeliner / E103.

CH-G105 / M105 / E105

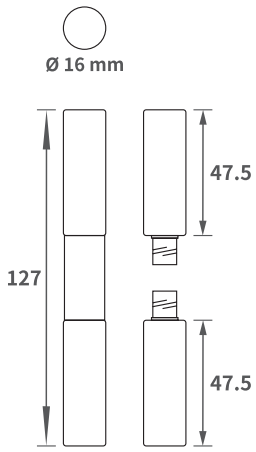

*Dimension:
Ø 16 mm x 127 mm
(cap 32 mm, bottle 47.5 mm)
*Capacity 7 ml + 7 ml
*Material:
Cap/Aluminum
Bottle/PETG (blow)
Stem/POM
Wiper/PE
Applicator/TPEE + flocked NYLON
Mascara/Stainless steel + brush NYLON
Eyeliner/Brush NYLON
*Description:
Lip gloss / G105.
Mascara / M105.
Eyeliner / E105.

CH-G106 / M106 / E106

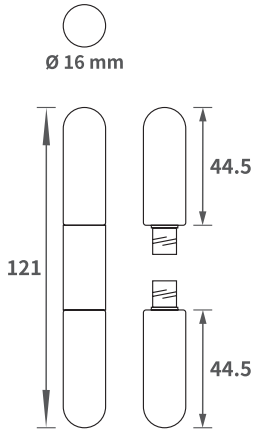

*Dimension:
Ø 16 mm x 121 mm
(cap 32 mm, bottle 44.5 mm)
*Capacity 6 ml + 6 ml
*Material:
Cap/Aluminum
Bottle/PETG (blow)
Stem/POM
Wiper/PE
Applicator/TPEE + flocked NYLON
Mascara/Stainless steel + brush NYLON
Eyeliner/Brush NYLON
*Description:
Lip gloss / G106.
Mascara / M106.
Eyeliner / E106.

CH-G107 / M107 / E107

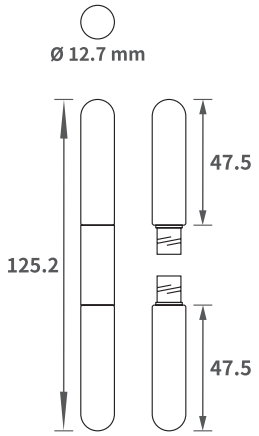

*Dimension:
Ø 12.7 mm x 125.2 mm
(cap 30.2 mm, bottle 47.5 mm)
*Capacity 4 ml + 4 ml
*Material:
Cap/Aluminum
Bottle/PETG (blow)
Stem/PP
Wiper/PE
Applicator/TPEE + flocked NYLON
Mascara/Stainless steel + brush NYLON
Eyeliner/Brush NYLON
*Description:
Lip gloss / G107.
Mascara / M107.
Eyeliner / E107.

CH- G108 / M108

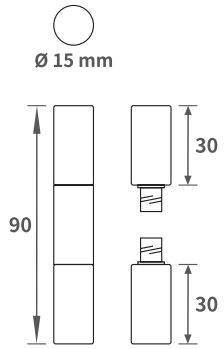

*Dimension:
Ø 15 mm x 90 mm
(cap 30 mm, bottle 30 mm)
*Capacity 4 ml + 4 ml
*Material:
Cap/AS+ABS
Bottle/PETG (blow)
Stem/PP
Wiper/PE
Applicator/TPEE + flocked NYLON
Mascara/Stainless steel + brush NYLON
*Description:
Lip gloss / G108.
Mascara / M108.

CH-M109 / G109 / E109

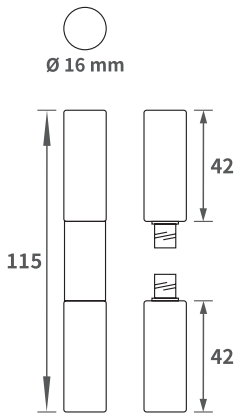

*Dimension:
Ø 16 mm x 115 mm
(cap 31 mm, bottle 42 mm)
*Capacity 5.5 ml + 5.5 ml
*Material:
Cap/AS+ABS
Bottle/PETG (blow)
Stem/PP
Wiper/PE
Mascara/Stainless steel + brush NYLON
Applicator/TPEE + flocked NYLON
Eyeliner/Brush NYLON
*Description:
Mascara / M109.
Lip gloss / G109.
Eyeliner / E109.

CH-G110 / M110 / E110

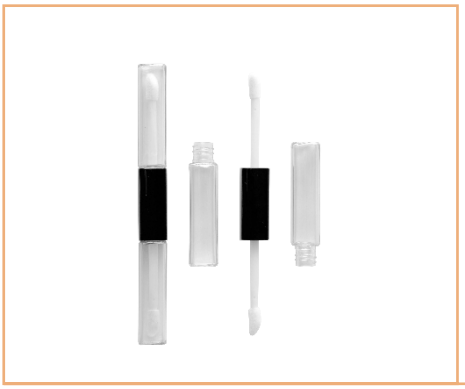

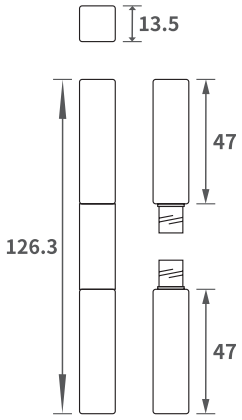

*Dimension:
13.5 mm x 13.5 mm x 126.3 mm
(cap 32.3 mm, bottle 47 mm)
*Capacity 5 ml + 5 ml
*Material:
Cap/Aluminum or AS+ABS
Bottle/PETG (blow)
Stem/POM
Wiper/PE
Applicator/TPEE + flocked NYLON
Mascara/Stainless steel + brush NYLON
Eyeliner/Brush NYLON
*Description:
Lip gloss / G110.
Mascara / M110.
Eyeliner / E110.

CH-M111 / G111

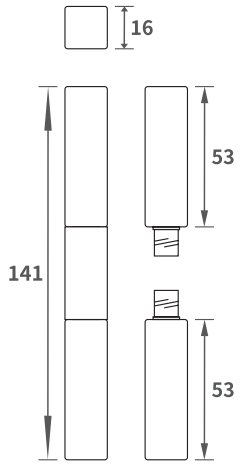

*Dimension:
16 mm x 16 mm x 141 mm
(cap 35 mm, bottle 53 mm)
*Capacity 8.5 ml + 8.5 ml
*Material:
Cap/AS+ABS
Bottle/PETG (blow)
Stem/POM
Wiper/PE
Mascara/Stainless steel
+ brush NYLON
Applicator/TPEE + flocked NYLON
*Description:
Mascara / M111.
Lip gloss / G111.

CH-G120/M120/E120

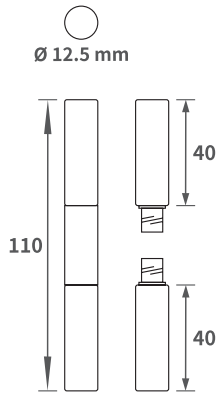

*Dimension:
Ø 12.5 mm x 110 mm
(cap 30 mm, bottle 40 mm)
*Capacity 3.5 ml + 3.5 ml
*Material:
Cap/Aluminum
Bottle/PETG (blow)
Stem/PP
Wiper/PE
Applicator/TPEE + flocked NYLON
Mascara/Stainless steel + brush NYLON
Eyeliner/Brush NYLON
*Description:
Lip gloss / G120.
Mascara / M120.
Eyeliner / E120.

CH-G121/M121/E121

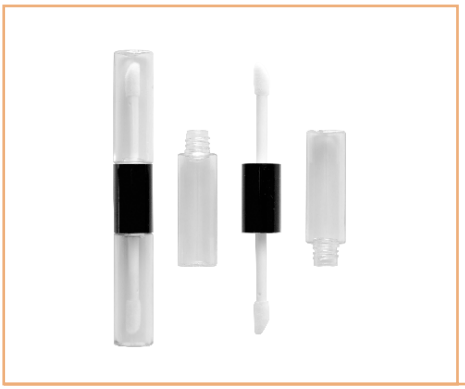

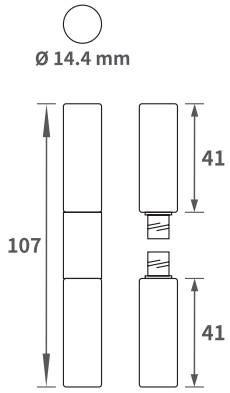

*Dimension:
Ø 14.4 mm x 107 mm
(cap 25 mm, bottle 41 mm)
*Capacity 4 ml + 4 ml
*Material:
Cap/AS+ABS
Bottle/PETG (blow)
Stem/PP
Wiper/PE
Applicator/TPEE + flocked NYLON
Mascara/Stainless steel + brush NYLON
Eyeliner/Brush NYLON
*Description:
Lip gloss / G121.
Mascara / M121.
Eyeliner / E121.

CH-E160 / G160

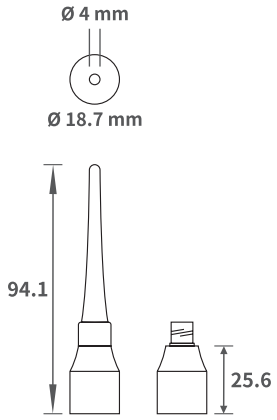

*Dimension:
Ø 18.7 mm x 94.1 mm
(cap 68.5 mm, bottle 25.6 mm)
*Capacity 4 ml
*Material:
Cap/AS+ABS
Bottle/PETG (blow)
Stem/PP
Wiper/PE
Eyeliner/Brush NYLON
Applicator/TPEE + flocked NYLON
*Description:
Eyeliner / E160.
Lip gloss / G160.

CH-E161 / G161

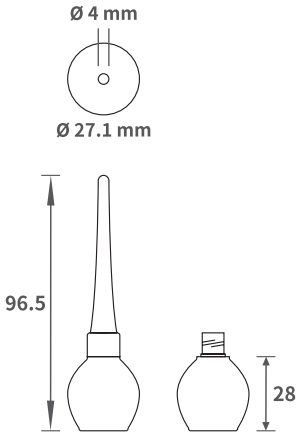

*Dimension:
Ø 27.1 mm x 96.5 mm
(cap 68.5 mm, bottle 28 mm)
*Capacity 8.5 ml
*Material:
Cap/AS+ABS
Bottle/PETG (blow)
Stem/PP
Wiper/PE
Eyeliner/Brush NYLON
Applicator/TPEE + flocked NYLON
*Description:
Eyeliner / E161.
Lip gloss / G161.

CH-E162 / G162

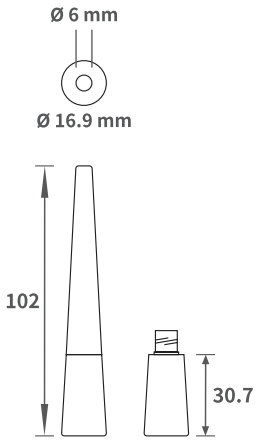

*Dimension:
Ø 16.9 mm x 102 mm
(cap 71.3 mm, bottle 30.7 mm)
*Capacity 4 ml
*Material:
Cap/AS+ABS
Bottle/PETG (blow)
Stem/PP
Wiper/PE
Eyeliner/Brush NYLON
Applicator/TPEE + flocked NYLON
*Description:
Eyeliner / E162.
Lip gloss / G162.

CH-E163 / G163

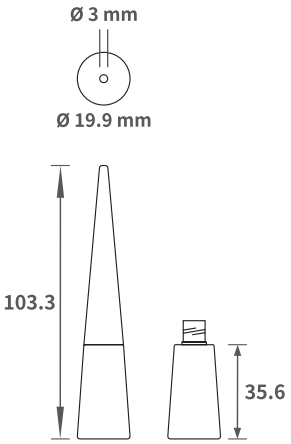

*Dimension:
Ø 19.9 mm x 103.3 mm
(cap 67.7 mm, bottle 35.6 mm)
*Capacity 7 ml
*Material:
Cap/AS+ABS
Bottle/PETG (blow)
Stem/PP
Wiper/PE
Eyeliner/Brush NYLON
Applicator/TPEE + flocked NYLON
*Description:
Eyeliner / E163.
Lip gloss / G163.

CH-E165 / G165

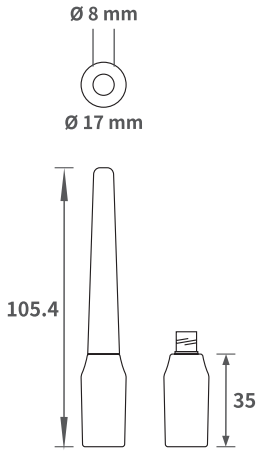

*Dimension:
Ø 17 mm x 105.4 mm
(cap 70.4 mm, bottle 35 mm)
*Capacity 6.3 ml
*Material:
Cap/AS
Bottle/PETG (blow)
Stem/PP
Wiper/PE
Eyeliner/Brush NYLON
Applicator/TPEE + flocked NYLON
*Description:
Eyeliner / E165.
Lip gloss / G165.

CH-E166 / G166

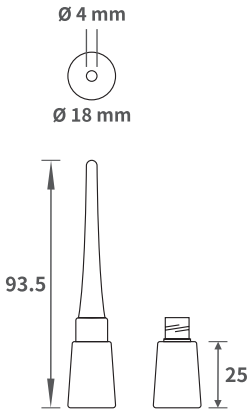

*Dimension:
Ø 18 mm x 93.5 mm
(cap 68.5 mm, bottle 25 mm)
*Capacity 3.5 ml
*Material:
Cap/AS+ABS
Bottle/PETG (blow)
Stem/PP
Wiper/PE
Eyeliner/Brush NYLON
Applicator/TPEE + flocked NYLON
*Description:
Eyeliner / E166.
Lip gloss / G166.

CH-E167 / G167

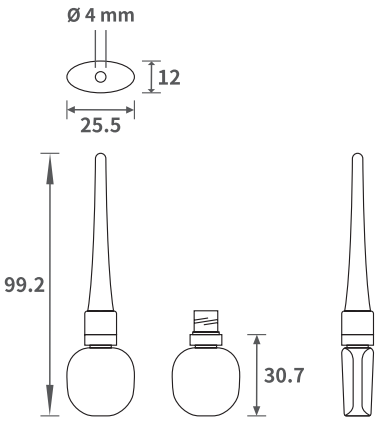

*Dimension:
25.5mm x 12mm x 99.2mm
(cap 68.5 mm, bottle 30.7 mm)
*Capacity 4 ml
*Material:
Cap/AS+ABS
Bottle/PETG (blow)
Stem/PP
Wiper/PE
Eyeliner/Brush NYLON
Applicator/TPEE + flocked NYLON
*Description:
Eyeliner / E167.
Lip gloss / G167.

CH-E168 / G168

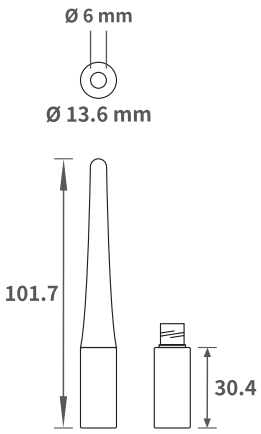

*Dimension:
Ø 13.6 mm x 101.7 mm
(cap 71.3 mm, bottle 30.4 mm)
*Capacity 2.5 ml
*Material:
Cap/AS+ABS
Bottle/PETG (blow)
Stem/PP
Wiper/PE
Eyeliner/Brush NYLON
Applicator/TPEE + flocked NYLON
*Description:
Eyeliner / E168.
Lip gloss / G168.

CH-E169 / G169

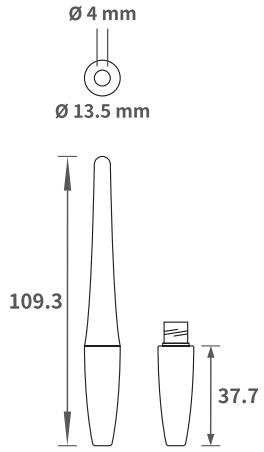

*Dimension:
Ø 13.5 mm x 109.3 mm
(cap 71.6 mm, bottle 37.7 mm)
*Capacity 2 ml
*Material:
Cap/AS+ABS
Bottle/PETG (blow)
Stem/PP
Wiper/PE
Eyeliner/Brush NYLON
Applicator/TPEE + flocked NYLON
*Description:
Eyeliner / E169.
Lip gloss / G169.

CH-E170 / G170

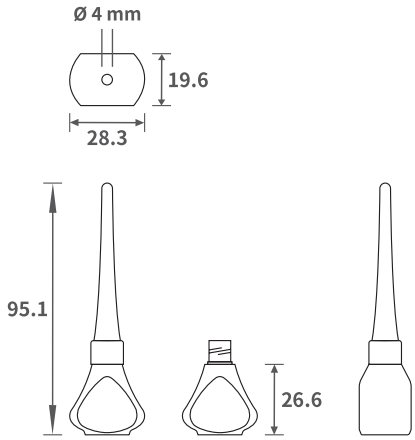

*Dimension:
28.3mm x 19.6mm x 95.1mm
(cap 68.5 mm, bottle 26.6 mm)
*Capacity 4 ml
*Material:
Cap/AS+ABS
Bottle/PETG (blow)
Stem/PP
Wiper/PE
Eyeliner/Brush NYLON
Applicator/TPEE + flocked NYLON
*Description:
Eyeliner / E170.
Lip gloss / G170.

CH-E171 / G171

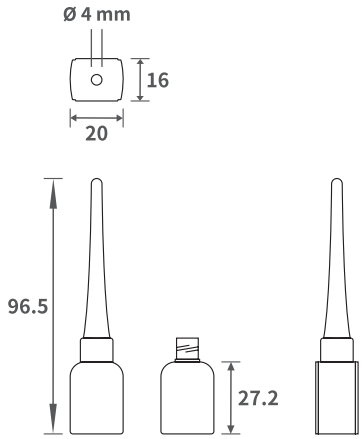

*Dimension:
20 mm x 16 mm x 96.5 mm
(cap 69.3 mm, bottle 27.2 mm)
*Capacity 5.8 ml
*Material:
Cap/AS+ABS
Bottle/PETG (blow)
Stem/PP
Wiper/PE
Eyeliner/Brush NYLON
Applicator/TPEE + flocked NYLON
*Description:
Eyeliner / E171.
Lip gloss / G171.

CH-E172 / G172

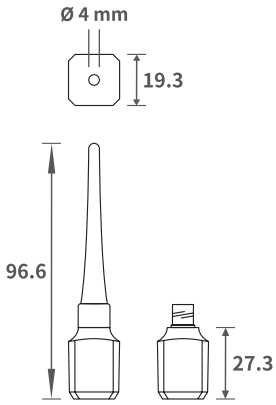

*Dimension:
19.3mm x 19.3mm x 96.6mm
(cap 69.3 mm, bottle 27.3 mm)
*Capacity 7.3 ml
*Material:
Cap/AS+ABS
Bottle/PETG (blow)
Stem/PP
Wiper/PE
Eyeliner/Brush NYLON
Applicator/TPEE + flocked NYLON
*Description:
Eyeliner / E172.
Lip gloss / G172.

CH-E173 / G173

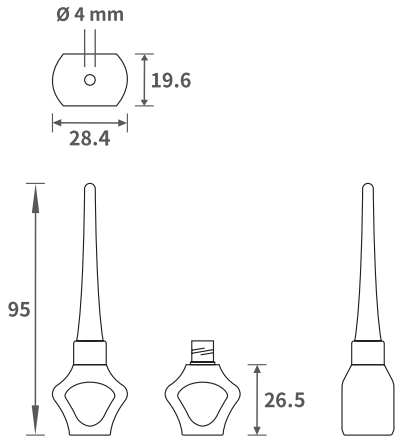

*Dimension:
28.4mm x 19.6mm x 95 mm
(cap 68.5 mm, bottle 26.5 mm)
*Capacity 4 ml
*Material:
Cap/AS+ABS
Bottle/PETG (blow)
Stem/PP
Wiper/PE
Eyeliner/Brush NYLON
Applicator/TPEE + flocked NYLON
*Description:
Eyeliner / E173.
Lip gloss / G173.

CH-E175 / G175

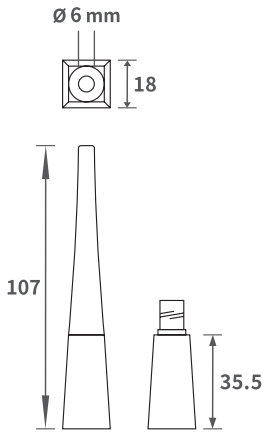

*Dimension:
capØ 13.5 mm x 71.5 mm
bottle 18 mm x 18 mm x 35.5 mm
*Capacity 6.3 ml
*Material:
Cap/AS+ABS
Bottle/PETG (blow)
Stem/PP
Wiper/PE
Eyeliner/Brush NYLON
Applicator/TPEE + flocked NYLON
*Description:
Eyeliner / E175.
Lip gloss / G175.

CH-E180

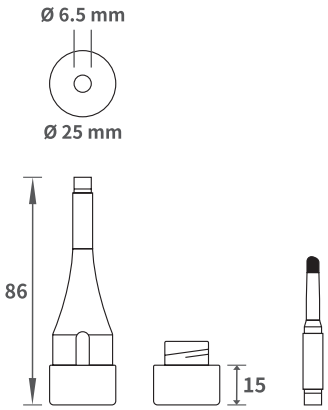

*Dimension:
Ø 25 mm x 86 mm
(cap 71 mm, bottle 15 mm)
*Capacity 2 ml
*Material:
Cap/AS+ABS
Bottle/Glass
Applicator/AS+ABS
Ferrule/Aluminum
Brush/PBT
Gasket/PE

CH-E181

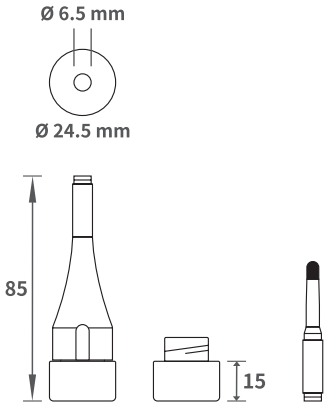

*Dimension:
Ø 24.5 mm x 85 mm
(cap 69.5 mm, bottle 15 mm)
*Capacity 2 ml
*Material:
Cap/AS+ABS
Bottle/AS
Applicator/AS+ABS
Ferrule/Aluminum
Brush/PBT
Gasket/Paper + PETG