CASE

CH-326AT / 330AT

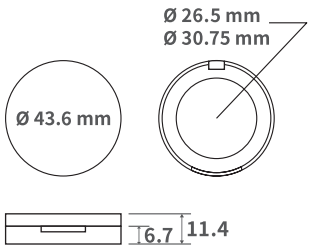

*Dimension:
Ø 43.6 mm x 11.4 mm
(lid 4.7 mm, base 6.7 mm)
*Inner Ø 26.5 mm/CH-326AT
Inner Ø 30.75 mm/CH-330AT
*Inner depth 4 mm
*Material:
Lid/AS
Base/AS
*Description:
Transparent lid and base.

CH-326BT / 330BT

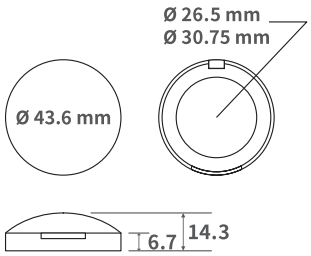

*Dimension:
Ø 43.6 mm x 14.3 mm
(lid 7.6 mm, base 6.7 mm)
*Inner Ø 26.5 mm/CH-326BT
Inner Ø 30.75 mm/CH-330BT
*Inner depth 4 mm
*Material:
Lid/AS
Base/AS
*Description:
Transparent lid and base.

CH-326A / 330A

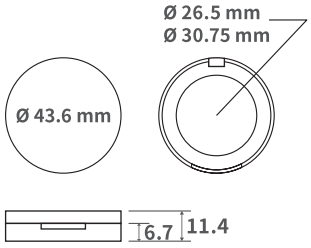

*Dimension:
Ø 43.6 mm x 11.4 mm
(lid 4.7 mm, base 6.7 mm)
*Inner Ø 26.5 mm/CH-326A
Inner Ø 30.75 mm/CH-330A
*Inner depth 4 mm
*Material:
Lid/AS
Base/AS+ABS
*Description:
• Transparent lid.
• Injection color base.

CH-326B / 330B

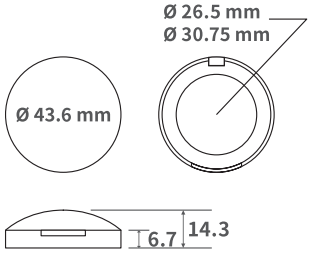

*Dimension:
Ø 43.6 mm x 14.3 mm
(lid 7.6 mm, base 6.7 mm)
*Inner Ø 26.5 mm/CH-326B
Inner Ø 30.75 mm/CH-330B
*Inner depth 4 mm
*Material:
Lid/AS
Base/AS+ABS
*Description:
• Transparent lid.
• Injection color base.

CH-326AM / 330AM

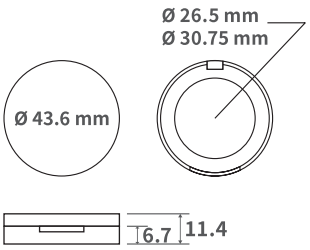

*Dimension:
Ø 43.6 mm x 11.4 mm
(lid 4.7 mm, base 6.7 mm)
*Inner Ø 26.5 mm/CH-326AM
Inner Ø 30.75 mm/CH-330AM
*Inner depth 4 mm
*Material:
Lid/AS+ABS
Base/AS+ABS
*Description:
Lid with mirror (1.3 mm).

CH-361AT / 366AT / 373AT

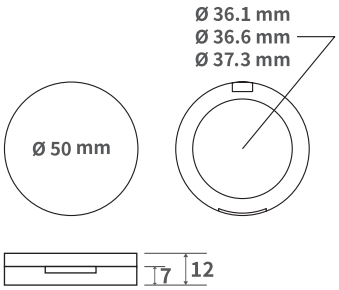

*Dimension:
Ø 50 mm x 12 mm
(lid 5 mm, base 7 mm)
*Inner Ø 36.1 mm/CH-361AT
Inner Ø 36.6 mm/CH-366AT
Inner Ø 37.3 mm/CH-373AT
*Inner depth 4 mm
*Material:
Lid/AS
Base/AS
*Description:
Transparent lid and base.

CH-361BT / 366BT / 373BT

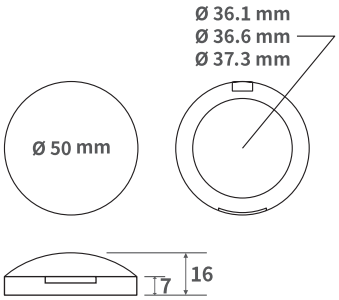

*Dimension:
Ø 50 mm x 16 mm
(lid 9 mm, base 7 mm)
*Inner Ø 36.1 mm/CH-361BT
Inner Ø 36.6 mm/CH-366BT
Inner Ø 37.3 mm/CH-373BT
*Inner depth 4 mm
*Material:
Lid/AS
Base/AS
*Description:
Transparent lid and base.

CH-361HT / 366HT / 373HT

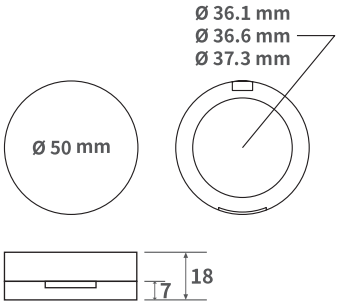

*Dimension:
Ø 50 mm x 18 mm
(lid 11 mm, base 7 mm)
*Inner Ø 36.1 mm/CH-361HT
Inner Ø 36.6 mm/CH-366HT
Inner Ø 37.3 mm/CH-373HT
*Inner depth 4 mm
*Material:
Lid/AS
Base/AS
*Description:
Transparent lid and base.

CH-361A / 366A / 373A

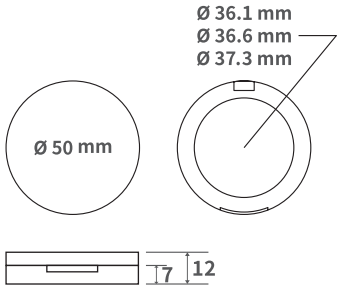

*Dimension:
Ø 50 mm x 12 mm
(lid 5 mm, base 7 mm)
*Inner Ø 36.1 mm/CH-361A
Inner Ø 36.6 mm/CH-366A
Inner Ø 37.3 mm/CH-373A
*Inner depth 4 mm
*Material:
Lid/AS
Base/AS+ABS
*Description:
Transparent lid.
Injection color base.

CH-361B / 366B / 373B

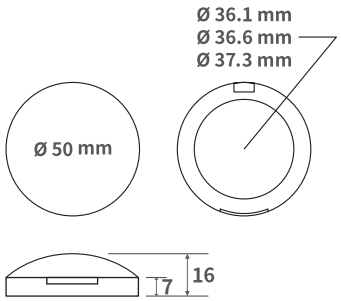

*Dimension:
Ø 50 mm x 16 mm
(lid 9 mm, base 7 mm)
*Inner Ø 36.1 mm/CH-361B
Inner Ø 36.6 mm/CH-366B
Inner Ø 37.3 mm/CH-373B
*Inner depth 4 mm
*Material:
Lid/AS
Base/AS+ABS
*Description:
Transparent lid.
Injection color base.

CH-361H / 366H / 373H

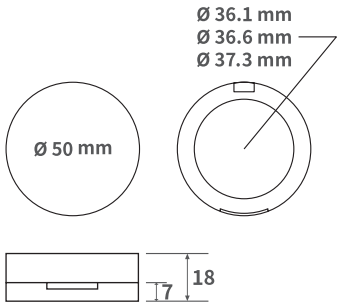

*Dimension:
Ø 50 mm x 18 mm
(lid 11 mm, base 7 mm)
*Inner Ø 36.1 mm/CH-361H
Inner Ø 36.6 mm/CH-366H
Inner Ø 37.3 mm/CH-373H
*Inner depth 4 mm
*Material:
Lid/AS
Base/AS+ABS
*Description:
Transparent lid.
Injection color base.

CH-361AM / 366AM / 373AM

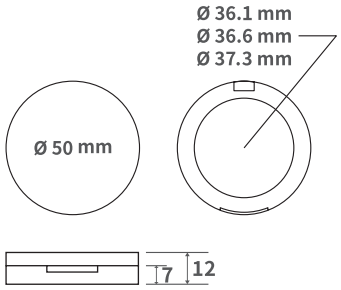

*Dimension:
Ø 50 mm x 12 mm
(lid 5 mm, base 7 mm)
*Inner Ø 36.1 mm/CH-361AM
Inner Ø 36.6 mm/CH-366AM
Inner Ø 37.3 mm/CH-373AM
*Inner depth 4 mm
*Material:
Lid/AS+ABS
Base/AS+ABS
*Description:
Lid with mirror (1.3 mm).

CH-361HM / 366HM / 373HM

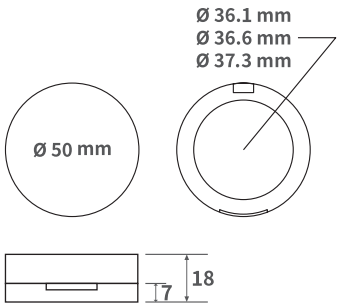

*Dimension:
Ø 50 mm x 18 mm
(lid 11 mm, base 7 mm)
*Inner Ø 36.1 mm/CH-361HM
Inner Ø 36.6 mm/CH-366HM
Inner Ø 37.3 mm/CH-373HM
*Inner depth 4 mm
*Material:
Lid/AS+ABS
Base/AS+ABS
*Description:
Lid with mirror (1.3 mm).

CH-348AT

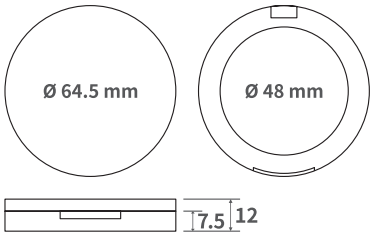

*Dimension:
Ø 64.5 mm x 12 mm
(lid 4.5 mm, base 7.5 mm)
*Inner Ø 48 mm
*Inner depth 4 mm
*Material:
Lid/AS
Base/AS
*Description:
Transparent lid and base.

CH-892BT

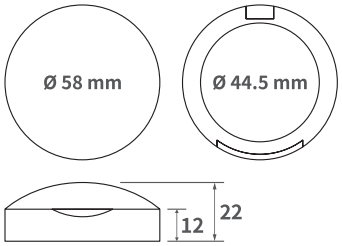

*Dimension:
Ø 58 mm x 22 mm
(lid 10 mm, base 12 mm)
*Inner Ø 44.5 mm
*Inner depth 11 mm
*Material:
Lid/AS
Base/AS
*Description:
Transparent lid and base.

CH-348HT

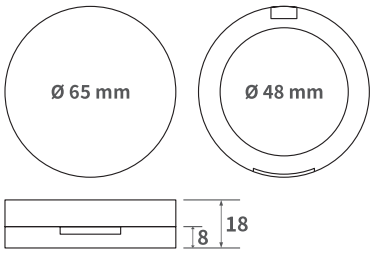

*Dimension:
Ø 65 mm x 18 mm
(lid 10 mm, base 8 mm)
*Inner Ø 48 mm
*Inner depth 4 mm
*Material:
Lid/AS
Base/AS
*Description:
Transparent lid and base.

CH-348A

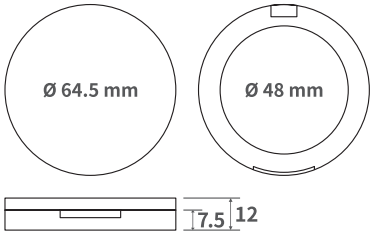

*Dimension:
Ø 64.5 mm x 12 mm
(lid 4.5 mm, base 7.5 mm)
*Inner Ø 48 mm
*Inner depth 4 mm
*Material:
Lid/AS
Base/AS+ABS
*Description:
•Transparent lid.
•Injection color base.

CH-892B

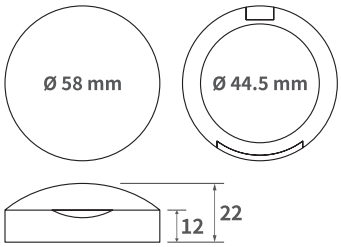

*Dimension:
Ø 58 mm x 22 mm
(lid 10 mm, base 12 mm)
*Inner Ø 44.5 mm
*Inner depth 11 mm
*Material:
Lid/AS
Base/AS+ABS
*Description:
•Transparent lid.
•Injection color base.

CH-348H

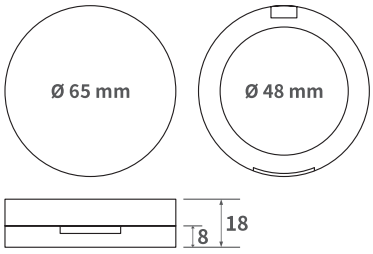

*Dimension:
Ø 65 mm x 18 mm
(lid 10 mm, base 8 mm)
*Inner Ø 48 mm
*Inner depth 4 mm
*Material:
Lid/AS
Base/AS+ABS
*Description:
•Transparent lid.
•Injection color base.

CH-348AM

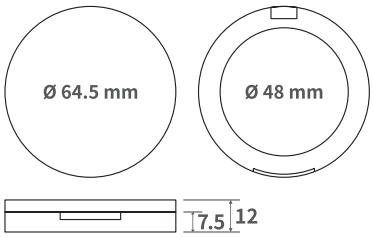

*Dimension:
Ø 64.5 mm x 12 mm
(lid 4.5 mm, base 7.5 mm)
*Inner Ø 48 mm
*Inner depth 4 mm
*Material:
Lid/AS+ABS
Base/AS+ABS
*Description:
Lid with mirror (1.3 mm).

CH-348HM

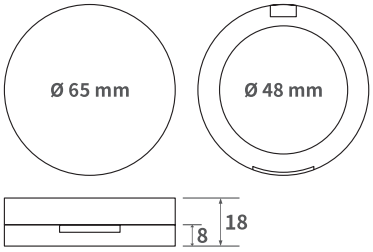

*Dimension:
Ø 65 mm x 18 mm
(lid 10 mm, base 8 mm)
*Inner Ø 48 mm
*Inner depth 4 mm
*Material:
Lid/AS+ABS
Base/AS+ABS
*Description:
Lid with mirror.

CH-359AT / 360AT

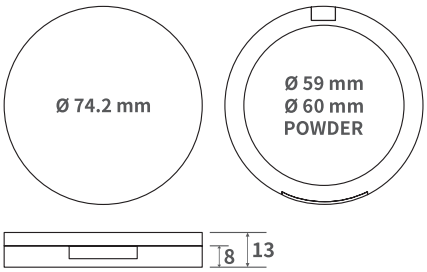

*Dimension:
Ø 74.2 mm x 13 mm
(lid 5 mm, base 8 mm)
*Inner Ø 59 mm/CH-359AT
Inner Ø 60 mm/CH-360AT
*Inner depth 5 mm
*Material:
Lid/AS
Base/AS
*Description:
• Transparent lid and base.
• Inner for 1 powder
or design your own insert.

CH-360ATE

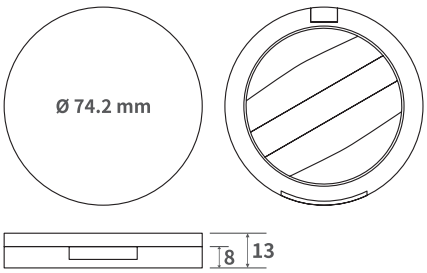

*Dimension:
Ø 74.2 mm x 13 mm
(lid 5 mm, base 8 mm)
*Inner Ø 60 mm
*Inner depth 4 mm
*Material:
Lid/AS
Base/AS
Insert/AS
*Description:
• Transparent lid and base.
• Insert for 4 eyeshadow + 1 applicator.

CH-360ATB

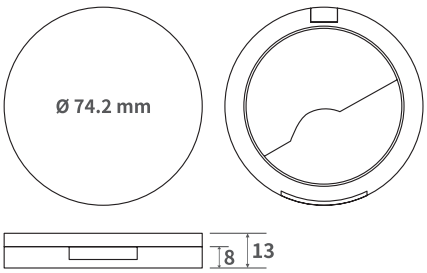

*Dimension:
Ø 74.2 mm x 13 mm
(lid 5 mm, base 8 mm)
*Inner Ø 60 mm
*Inner depth 4 mm
*Material:
Lid/AS
Base/AS
Insert/AS
*Description:
• Transparent lid and base.
• Insert for 1 blush + 1 brush.

CH-359BT / 360BT

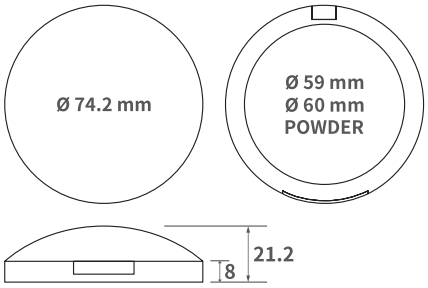

*Dimension:
Ø 74.2 mm x 21.2mm
(lid 13.2 mm, base 8 mm)
*Inner Ø 59 mm/CH-359BT
Inner Ø 60 mm/CH-360BT
*Inner depth 5 mm
*Material:
Lid/AS
Base/AS
*Description:
• Transparent lid and base.
• Inner for 1 powder
or design your own insert.

CH-359HT / 360HT

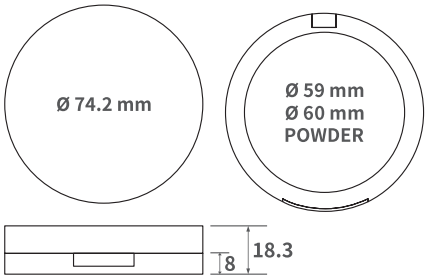

*Dimension:
Ø 74.2 mm x 18.3 mm
(lid 10.3 mm, base 8 mm)
*Inner Ø 59 mm/CH-359HT
Inner Ø 60 mm/CH-360HT
*Inner depth 5 mm
*Material:
Lid/AS
Base/AS
*Description:
• Transparent lid and base.
• Inner for 1 powder
or design your own insert.

CH-360HTE

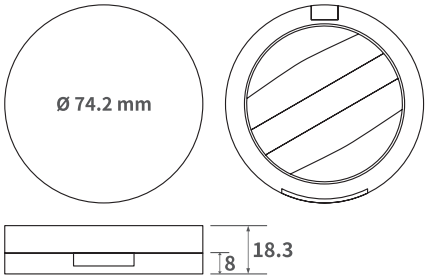

*Dimension:
Ø 74.2 mm x 18.3 mm
(lid 10.3 mm, base 8 mm)
*Inner Ø 60 mm
*Inner depth 4 mm
*Material:
Lid/AS
Base/AS
Insert/AS
*Description:
• Transparent lid and base.
• Insert for 4 eyeshadow + 1 applicator.

CH-360HTB

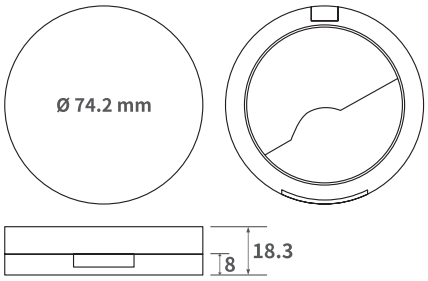

*Dimension:
Ø 74.2 mm x 18.3 mm
(lid 10.3 mm, base 8 mm)
*Inner Ø 60 mm
*Inner depth 4 mm
*Material:
Lid/AS
Base/AS
Insert/AS
*Description:
• Transparent lid and base.
• Insert for 1 blush + 1 brush.

CH-359A / 360A

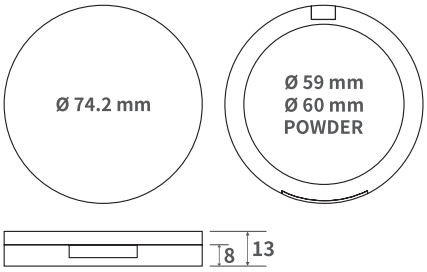

*Dimension:
Ø 74.2 mm x 13 mm
(lid 5 mm, base 8 mm)
*Inner Ø 59 mm/CH-359A
Inner Ø 60 mm/CH-360A
*Inner depth 5 mm
*Material:
Lid/AS
Base/AS+ABS
*Description:
• Transparent lid.
• Injection color base.
• Inner for 1 powder
or design your own insert.

CH-360AE

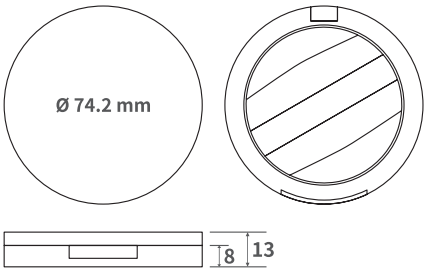

*Dimension:
Ø 74.2 mm x 13 mm
(lid 5 mm, base 8 mm)
*Inner Ø 60 mm
*Inner depth 4 mm
*Material:
Lid/AS
Base/AS+ABS
Insert/AS+ABS
*Description:
• Transparent lid.
• Injection color base.
• Insert for 4 eyeshadow + 1 applicator.

CH-360AB

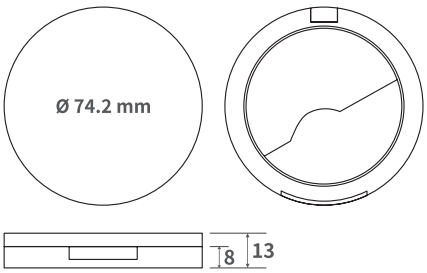

*Dimension:
Ø 74.2 mm x 13 mm
(lid 5 mm, base 8 mm)
*Inner Ø 60 mm
*Inner depth 4 mm
*Material:
Lid/AS
Base/AS+ABS
Insert/AS+ABS
*Description:
• Transparent lid.
• Injection color base.
• Insert for 1 blush and 1 brush.

CH-359B / 360B

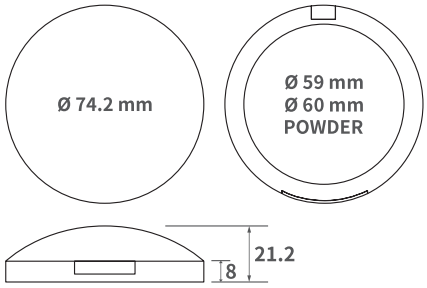

*Dimension:
Ø 74.2 mm x 21.2 mm
(lid 13.2 mm, base 8 mm)
*Inner Ø 59 mm/CH-359B
Inner Ø 60 mm/CH-360B
*Inner depth 5 mm
*Material:
Lid/AS
Base/AS+ABS
*Description:
• Transparent lid.
• Injection color base.
• Inner for 1 powder
or design your own insert.

CH-359H / 360H

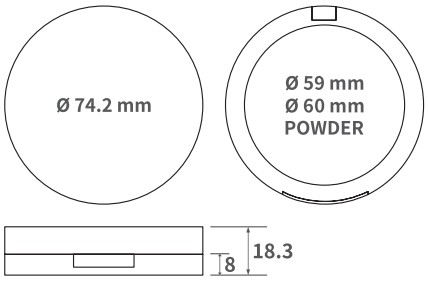

*Dimension:
Ø 74.2 mm x 18.3 mm
(lid 10.3 mm, base 8 mm)
*Inner Ø 59 mm/CH-359H
Inner Ø 60 mm/CH-360H
*Inner depth 5 mm
*Material:
Lid/AS
Base/AS+ABS
*Description:
• Transparent lid.
• Injection color base.
• Inner for 1 powder
or design your own insert.

CH-360HE

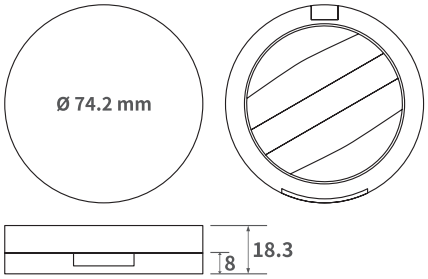

*Dimension:
Ø 74.2 mm x 18.3 mm
(lid 10.3 mm, base 8 mm)
*Inner Ø 60 mm
*Inner depth 4 mm
*Material:
Lid/AS
Base/AS+ABS
Insert/AS+ABS
*Description:
• Transparent lid.
• Injection color base.
• Insert for 4 eyeshadow + 1 applicator.

CH-360HB

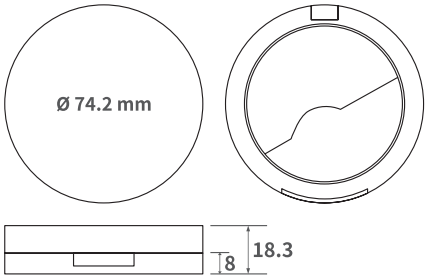

*Dimension:
Ø 74.2 mm x 18.3 mm
(lid 10.3 mm, base 8 mm)
*Inner Ø 60 mm
*Inner depth 4 mm
*Material:
Lid/AS
Base/AS+ABS
Insert/AS+ABS
*Description:
• Transparent lid.
• Injection color base.
• Insert for 1 blush and 1 brush.

CH-359AM / 360AM

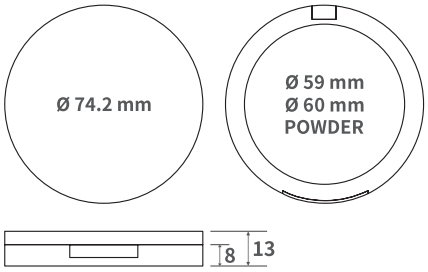

*Dimension:
Ø 74.2 mm x 13 mm
(lid 5 mm, base 8 mm)
*Inner Ø 59 mm/CH-359AM
Inner Ø 60 mm/CH-360AM
*Inner depth 5 mm
*Material:
Lid/AS+ABS
Base/AS+ABS
*Description:
• Lid with mirror (1.3mm).
• Inner for 1 powder
or design your own insert.

CH-360AME

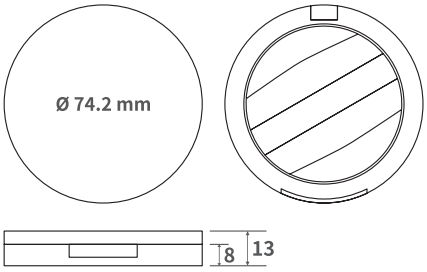

*Dimension:
Ø 74.2 mm x 13 mm
(lid 5 mm, base 8 mm)
*Inner Ø 60 mm
*Inner depth 4 mm
*Material:
Lid/AS+ABS
Base/AS+ABS
Insert/AS+ABS
*Description:
•Lid with mirror (1.3mm).
•Insert for 4 eyeshadow + 1 applicator.

CH-360AMB

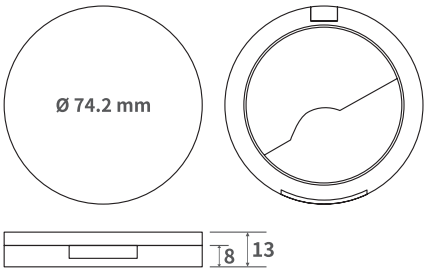

*Dimension:
Ø 74.2 mm x 13 mm
(lid 5 mm, base 8 mm)
*Inner Ø 60 mm
*Inner depth 4 mm
*Material:
Lid/AS+ABS
Base/AS+ABS
Insert/AS+ABS
*Description:
•Lid with mirror (1.3mm).
•Insert for 1 blush + 1 brush.

CH-359HM / 360HM

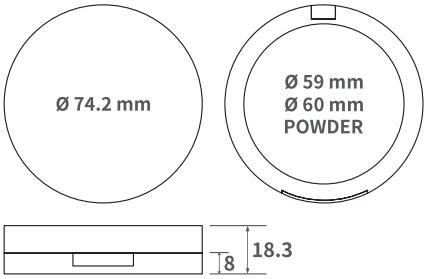

*Dimension:
Ø 74.2 mm x 18.3 mm
(lid 10.3 mm, base 8 mm)
*Inner Ø 59 mm/CH-359HM
Inner Ø 60 mm/CH-360HM
*Inner depth 5 mm
*Material:
Lid/AS+ABS
Base/AS+ABS
*Description:
•Lid with mirror.
•Inner for 1 powder
or design your own insert.

CH-360HME

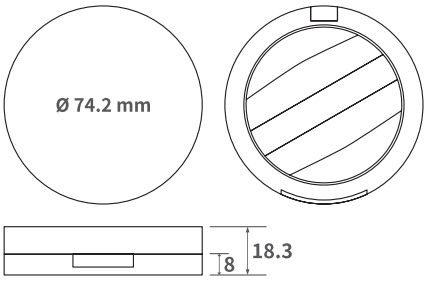

*Dimension:
Ø 74.2 mm x 18.3 mm
(lid 10.3 mm, base 8 mm)
*Inner Ø 60 mm
*Inner depth 4 mm
*Material:
Lid/AS+ABS
Base/AS+ABS
Insert/AS+ABS
*Description:
•Lid with mirror.
•Insert for 4 eyeshadow + 1 applicator.

CH-360HMB

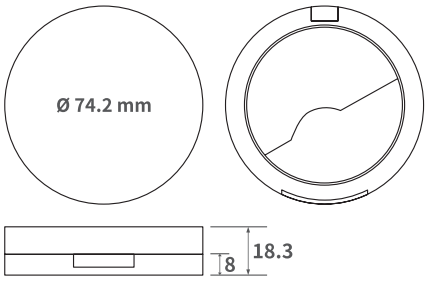

*Dimension:
Ø 74.2 mm x 18.3 mm
(lid 10.3 mm, base 8 mm)
*Inner Ø 60 mm
*Inner depth 4 mm
*Material:
Lid/AS+ABS
Base/AS+ABS
Insert/AS+ABS
*Description:
•Lid with mirror.
•Insert for 1 blush + 1 brush.

CH-359CT / 360CT

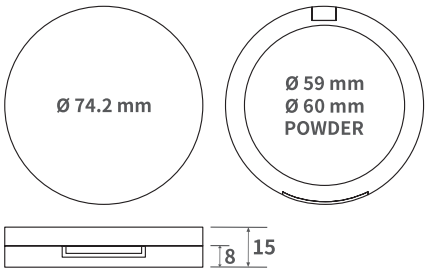

*Dimension:
Ø 74.2 mm x 15 mm
(lid 7 mm, base 8 mm)
*Inner Ø 59 mm/CH-359CT
Inner Ø 60 mm/CH-360CT
*Inner depth 5 mm
*Material:
Lid/AS
Base/AS
*Description:
•Transparent lid and base.
•Inner for 1 powder
or design your own insert.

CH-360CTE

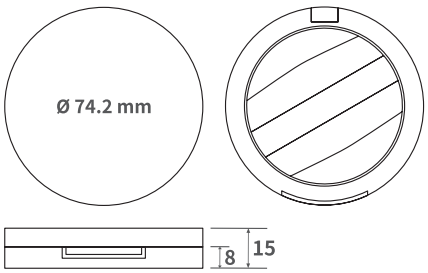

*Dimension:
Ø 74.2 mm x 15 mm
(lid 7 mm, base 8 mm)
*Inner Ø 60 mm
*Inner depth 4 mm
*Material:
Lid/AS
Base/AS
Insert/AS
*Description:
•Transparent lid and base.
•Insert for 4 eyeshadow + 1 applicator.

CH-360CTB

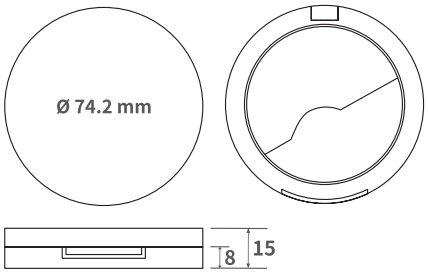

*Dimension:
Ø 74.2 mm x 15 mm
(lid 7 mm, base 8 mm)
*Inner Ø 60 mm
*Inner depth 4 mm
*Material:
Lid/AS
Base/AS
Insert/AS
*Description:
•Transparent lid and base.
•Insert for 1 blush + 1 brush.

CH-359C / 360C

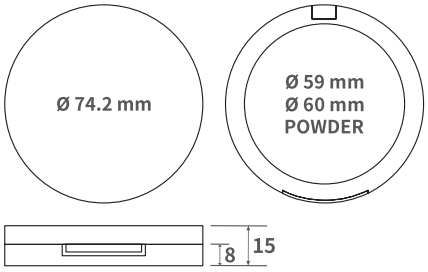

*Dimension:
Ø 74.2 mm x 15 mm
(lid 7 mm, base 8 mm)
*Inner Ø 59 mm/CH-359C
Inner Ø 60 mm/CH-360C
*Inner depth 5 mm
*Material:
Lid/AS
Base/AS+ABS
*Description:
• Transparent lid.
• Injection color base.
• Inner for 1 powder
or design your own insert.

CH-360CE

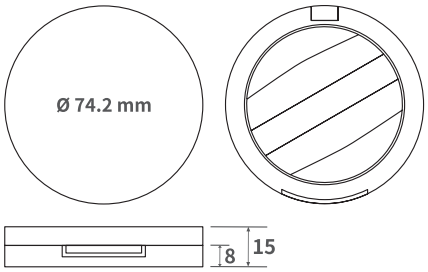

*Dimension:
Ø 74.2 mm x 15 mm
(lid 7 mm, base 8 mm)
*Inner Ø 60 mm
*Inner depth 4 mm
*Material:
Lid/AS
Base/AS+ABS
Insert/AS+ABS
*Description:
• Transparent lid.
• Injection color base.
• Insert for 4 eyeshadow + 1 applicator.

CH-360CB

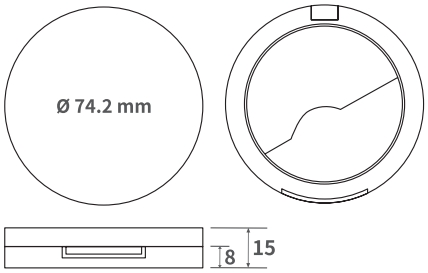

*Dimension:
Ø 74.2 mm x 15 mm
(lid 7 mm, base 8 mm)
*Inner Ø 60 mm
*Inner depth 4 mm
*Material:
Lid/AS
Base/AS+ABS
Insert/AS+ABS
*Description:
• Transparent lid.
• Injection color base.
• Insert for 1 blush and 1 brush.

CH-359CM / 360CM

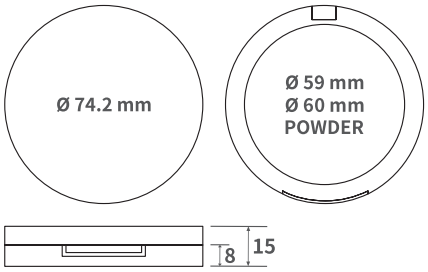

*Dimension:
Ø 74.2 mm x 15 mm
(lid 7 mm, base 8 mm)
*Inner Ø 59 mm/CH-359CM
Inner Ø 60 mm/CH-360CM
*Inner depth 5 mm
*Material:
Lid/AS+ABS
Base/AS+ABS
*Description:
• Lid with mirror.
• Inner for 1 powder
or design your own insert.

CH-360CME

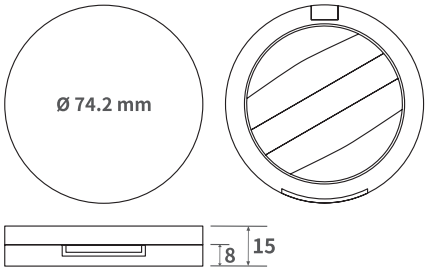

*Dimension:
Ø 74.2 mm x 15 mm
(lid 7 mm, base 8 mm)
*Inner Ø 60 mm
*Inner depth 4 mm
*Material:
Lid/AS+ABS
Base/AS+ABS
Insert/AS+ABS
*Description:
•Lid with mirror.
•Insert for 4 eyeshadow + 1 applicator.

CH-360CMB

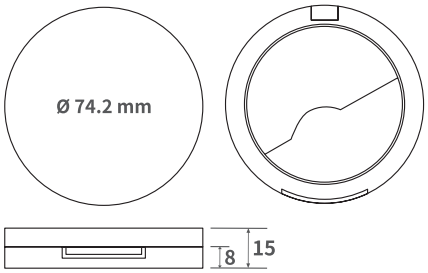

*Dimension:
Ø 74.2 mm x 15 mm
(lid 7 mm, base 8 mm)
*Inner Ø 60 mm
*Inner depth 4 mm
*Material:
Lid/AS+ABS
Base/AS+ABS
Insert/AS+ABS
*Description:
•Lid with mirror.
•Insert for 1 blush and 1 brush.

CH-359NT / 360NT

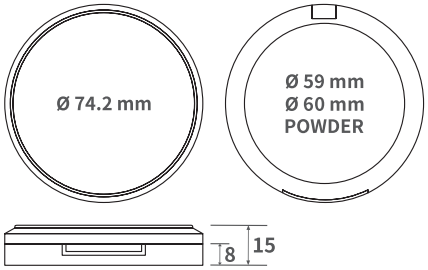

*Dimension:
Ø 74.2 mm x 15 mm
(lid 7 mm, base 8 mm)
*Inner Ø 59 mm/CH-359NT
Inner Ø 60 mm/CH-360NT
*Inner depth 5 mm
*Material:
Lid/AS
Base/AS
*Description:
•Transparent lid and base.
•Inner for 1 powder
or design your own insert.

CH-360NTE

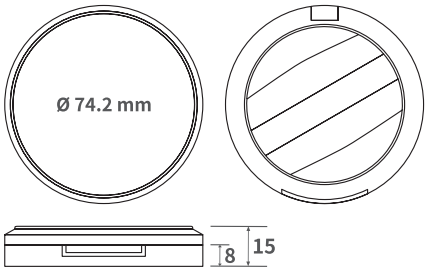

*Dimension:
Ø 74.2 mm x 15 mm
(lid 7 mm, base 8 mm)
*Inner Ø 60 mm
*Inner depth 4 mm
*Material:
Lid/AS
Base/AS
Insert/AS
*Description:
•Transparent lid and base.
•Insert for 4 eyeshadow + 1 applicator.

CH-360NTB

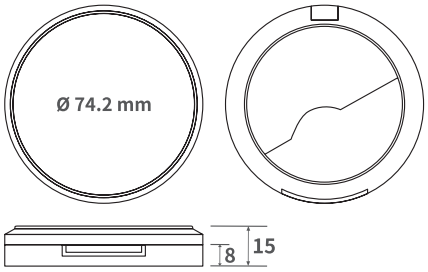

*Dimension:
Ø 74.2 mm x 15 mm
(lid 7 mm, base 8 mm)
*Inner Ø 60 mm
*Inner depth 4 mm
*Material:
Lid/AS
Base/AS
Insert/AS
*Description:
•Transparent lid and base.
•Insert for 1 blush + 1 brush.

CH-359N / 360N

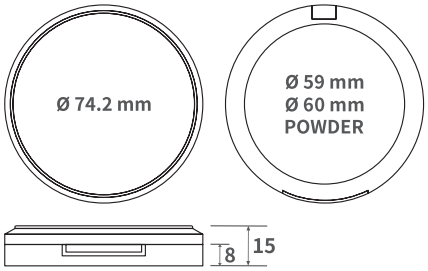

*Dimension:
Ø 74.2 mm x 15 mm
(lid 7 mm, base 8 mm)
*Inner Ø 59 mm/CH-359N
Inner Ø 60 mm/CH-360N
*Inner depth 5 mm
*Material:
Lid/AS
Base/AS+ABS
*Description:
•Transparent lid.
•Injection color base.
•Inner for 1 powder
or design your own insert.

CH-360NE

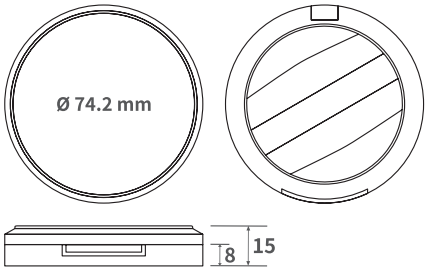

*Dimension:
Ø 74.2 mm x 15 mm
(lid 7 mm, base 8 mm)
*Inner Ø 60 mm
*Inner depth 4 mm
*Material:
Lid/AS
Base/AS+ABS
Insert/AS+ABS
*Description:
•Transparent lid.
•Injection color base.
•Insert for 4 eyeshadow + 1 applicator.

CH-360NB

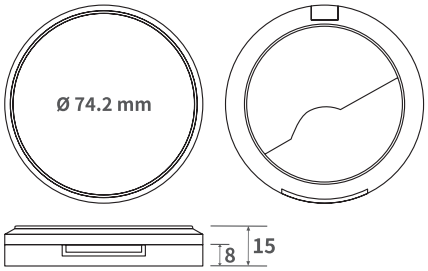

*Dimension:
Ø 74.2 mm x 15 mm
(lid 7 mm, base 8 mm)
*Inner Ø 60 mm
*Inner depth 4 mm
*Material:
Lid/AS
Base/AS+ABS
Insert/AS+ABS
*Description:
•Transparent lid.
•Injection color base.
•Insert for 1 blush and 1 brush.

CH-359NM / 360NM

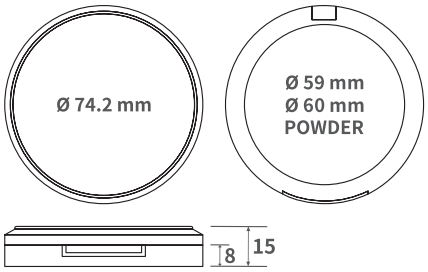

*Dimension:
Ø 74.2 mm x 15 mm
(lid 7 mm, base 8 mm)
*Inner Ø 59 mm/CH-359NM
Inner Ø 60 mm/CH-360NM
*Inner depth 5 mm
*Material:
Lid/AS+ABS
Base/AS+ABS
*Description:
• Lid with mirror.
• Inner for 1 powder
or design your own insert.

CH-360NME

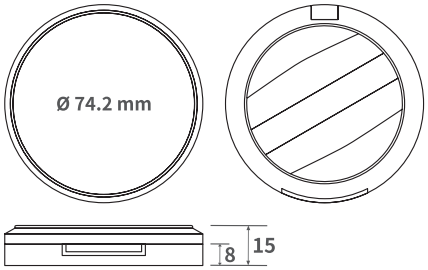

*Dimension:
Ø 74.2 mm x 15 mm
(lid 7 mm, base 8 mm)
*Inner Ø 60 mm
*Inner depth 4 mm
*Material:
Lid/AS+ABS
Base/AS+ABS
Insert/AS+ABS
*Description:
• Lid with mirror.
• Insert for 4 eyeshadow + 1 applicator.

CH-360NMB

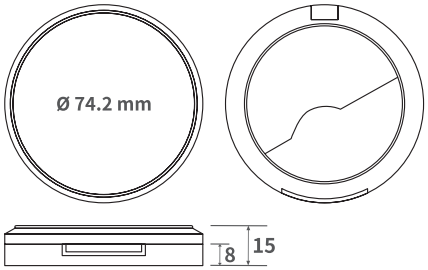

*Dimension:
Ø 74.2 mm x 15 mm
(lid 7 mm, base 8 mm)
*Inner Ø 60 mm
*Inner depth 4 mm
*Material:
Lid/AS+ABS
Base/AS+ABS
Insert/AS+ABS
*Description:
• Lid with mirror.
• Insert for 1 blush and 1 brush.

CH-360KT

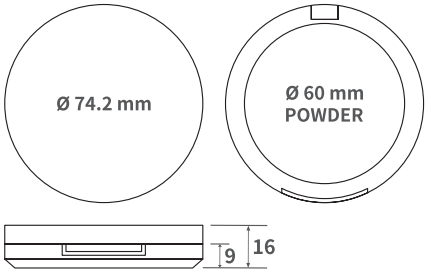

*Dimension:
Ø 74.2 mm x 16 mm
(lid 7 mm, base 9 mm)
*Inner Ø 60 mm
*Inner depth 5 mm
*Material:
Lid/AS
Base/AS
*Description:
• Transparent lid and base.
• Inner for 1 powder
or design your own insert.

CH-360KTE

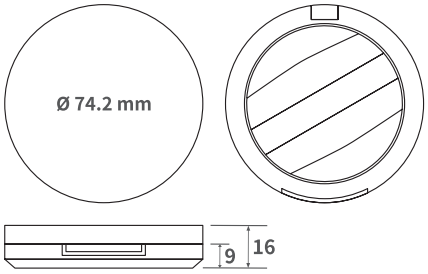

*Dimension:
Ø 74.2 mm x 16 mm
(lid 7 mm, base 9 mm)
*Inner Ø 60 mm
*Inner depth 4 mm
*Material:
Lid/AS
Base/AS
Insert/AS
*Description:
•Transparent lid and base.
•Insert for 4 eyeshadow + 1 applicator.

CH-360KTB

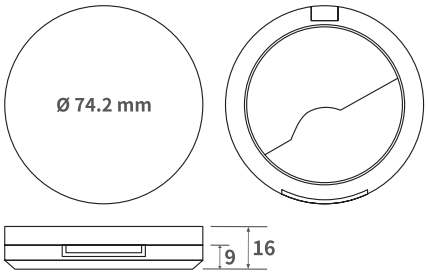

*Dimension:
Ø 74.2 mm x 16 mm
(lid 7 mm, base 9 mm)
*Inner Ø 60 mm
*Inner depth 4 mm
*Material:
Lid/AS
Base/AS
Insert/AS
*Description:
•Transparent lid and base.
•Insert for 1 blush + 1 brush.

CH-360K

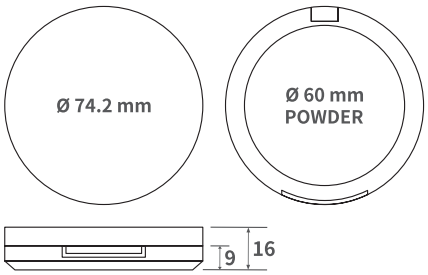

*Dimension:
Ø 74.2 mm x 16 mm
(lid 7 mm, base 9 mm)
*Inner Ø 60 mm
*Inner depth 5 mm
*Material:
Lid/AS
Base/AS+ABS
*Description:
•Transparent lid.
•Injection color base.
•Inner for 1 powder
or design your own insert.

CH-360KE

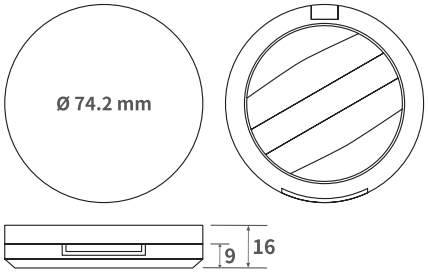

*Dimension:
Ø 74.2 mm x 16 mm
(lid 7 mm, base 9 mm)
*Inner Ø 60 mm
*Inner depth 4 mm
*Material:
Lid/AS
Base/AS+ABS
Insert/AS+ABS
*Description:
•Transparent lid.
•Injection color base.
•Insert for 4 eyeshadow + 1 applicator.

CH-360KB

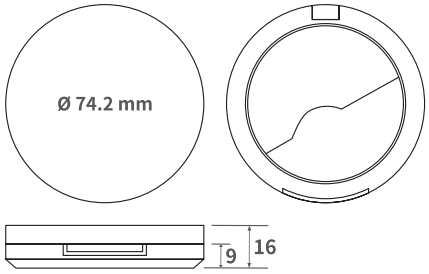

*Dimension:
Ø 74.2 mm x 16 mm
(lid 7 mm, base 9 mm)
*Inner Ø 60 mm
*Inner depth 4 mm
*Material:
Lid/AS
Base/AS+ABS
Insert/AS+ABS
*Description:
• Transparent lid.
• Injection color base.
• Insert for 1 blush and 1 brush.

CH-360KM

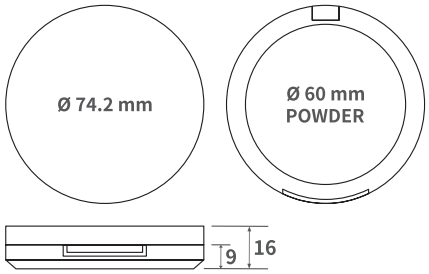

*Dimension:
Ø 74.2 mm x 16 mm
(lid 7 mm, base 9 mm)
*Inner Ø 60 mm
*Inner depth 5 mm
*Material:
Lid/AS+ABS
Base/AS+ABS
*Description:
• Lid with mirror.
• Inner for 1 powder
or design your own insert.

CH-360KME

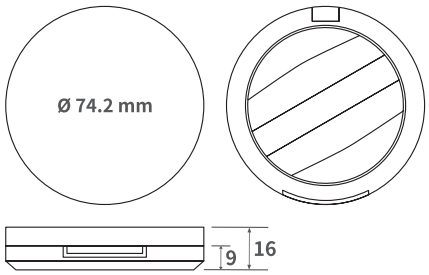

*Dimension:
Ø 74.2 mm x 16 mm
(lid 7 mm, base 9 mm)
*Inner Ø 60 mm
*Inner depth 4 mm
*Material:
Lid/AS+ABS
Base/AS+ABS
Insert/AS+ABS
*Description:
• Lid with mirror.
• Insert for 4 eyeshadow + 1 applicator.

CH-360KMB

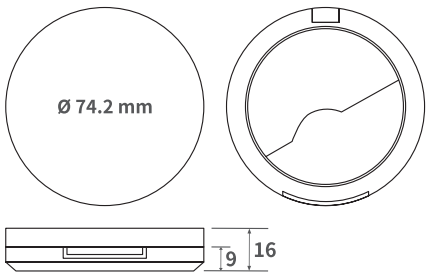

*Dimension:
Ø 74.2 mm x 16 mm
(lid 7 mm, base 9 mm)
*Inner Ø 60 mm
*Inner depth 4 mm
*Material:
Lid/AS+ABS
Base/AS+ABS
Insert/AS+ABS
*Description:
• Lid with mirror.
• Insert for 1 blush and 1 brush.

CH-360NKT

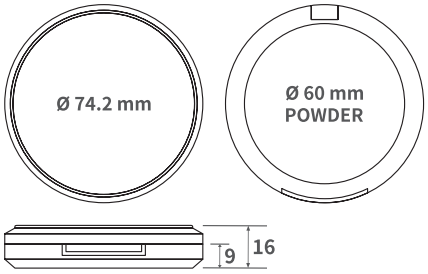

*Dimension:
Ø 74.2 mm x 16 mm
(lid 7 mm, base 9 mm)
*Inner Ø 60 mm
*Inner depth 5 mm
*Material:
Lid/AS
Base/AS
*Description:
• Transparent lid and base.
• Inner for 1 powder
or design your own insert.

CH-360NKTE

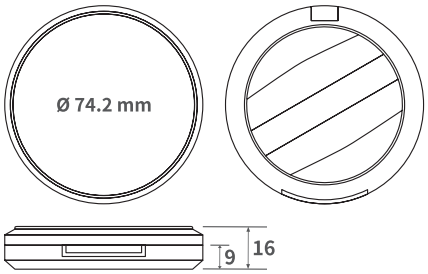

*Dimension:
Ø 74.2 mm x 16 mm
(lid 7 mm, base 9 mm)
*Inner Ø 60 mm
*Inner depth 4 mm
*Material:
Lid/AS
Base/AS
Insert/AS
*Description:
• Transparent lid and base.
• Insert for 4 eyeshadow + 1 applicator.

CH-360NKTB

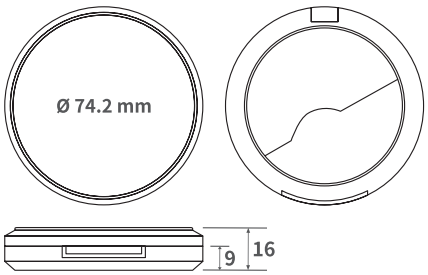

*Dimension:
Ø 74.2 mm x 16 mm
(lid 7 mm, base 9 mm)
*Inner Ø 60 mm
*Inner depth 4 mm
*Material:
Lid/AS
Base/AS
Insert/AS
*Description:
• Transparent lid and base.
• Insert for 1 blush + 1 brush.

CH-360NK

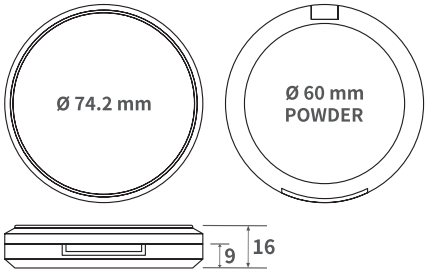

*Dimension:
Ø 74.2 mm x 16 mm
(lid 7 mm, base 9 mm)
*Inner Ø 60 mm
*Inner depth 5 mm
*Material:
Lid/AS
Base/AS+ABS
*Description:
• Transparent lid.
• Injection color base.
• Inner for 1 powder
or design your own insert.

CH-360NKE

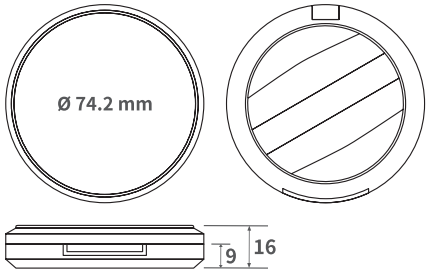

*Dimension:
Ø 74.2 mm x 16 mm
(lid 7 mm, base 9 mm)
*Inner Ø 60 mm
*Inner depth 4 mm
*Material:
Lid/AS
Base/AS+ABS
Insert/AS+ABS
*Description:
• Transparent lid.
• Injection color base.
• Insert for 4 eyeshadow + 1 applicator.

CH-360NKB

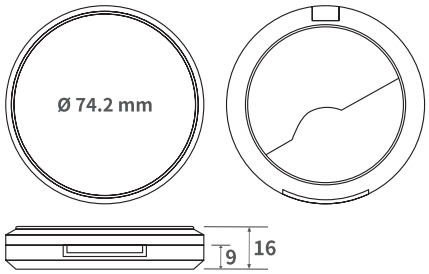

*Dimension:
Ø 74.2 mm x 16 mm
(lid 7 mm, base 9 mm)
*Inner Ø 60 mm
*Inner depth 4 mm
*Material:
Lid/AS
Base/AS+ABS
Insert/AS+ABS
*Description:
• Transparent lid.
• Injection color base.
• Insert for 1 blush and 1 brush.

CH-360NKM

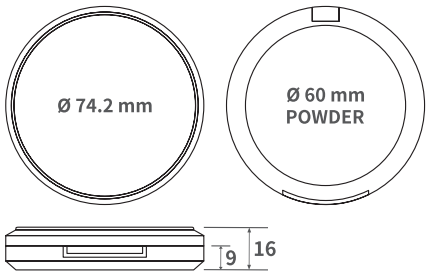

*Dimension:
Ø 74.2 mm x 16 mm
(lid 7 mm, base 9 mm)
*Inner Ø 60 mm
*Inner depth 5 mm
*Material:
Lid/AS+ABS
Base/AS+ABS
*Description:
• Lid with mirror.
• Inner for 1 powder
or design your own insert.

CH-360NKME

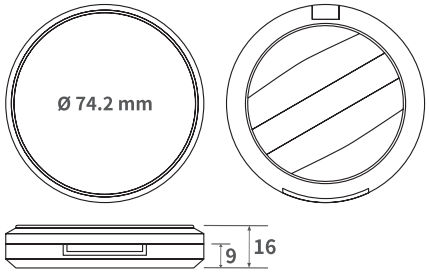

*Dimension:
Ø 74.2 mm x 16 mm
(lid 7 mm, base 9 mm)
*Inner Ø 60 mm
*Inner depth 4 mm
*Material:
Lid/AS+ABS
Base/AS+ABS
Insert/AS+ABS
*Description:
• Lid with mirror.
• Insert for 4 eyeshadow + 1 applicator.

CH-360NKMB

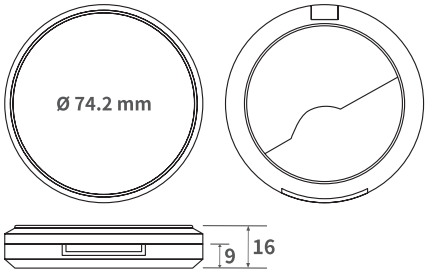

*Dimension:
Ø 74.2 mm x 16 mm
(lid 7 mm, base 9 mm)
*Inner Ø 60 mm
*Inner depth 4 mm
*Material:
Lid/AS+ABS
Base/AS+ABS
Insert/AS+ABS
*Description:
•Lid with mirror.
•Insert for 1 blush and 1 brush.

CH-360HKT

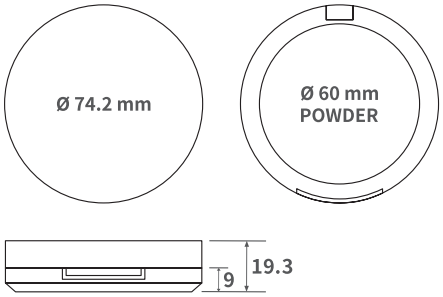

*Dimension:
Ø 74.2 mm x 19.3 mm
(lid 10.3 mm, base 9 mm)
*Inner Ø 60 mm
*Inner depth 5 mm
*Material:
Lid/AS
Base/AS
*Description:
•Transparent lid and base.
•Inner for 1 powder
or design your own insert.

CH-360HKTE

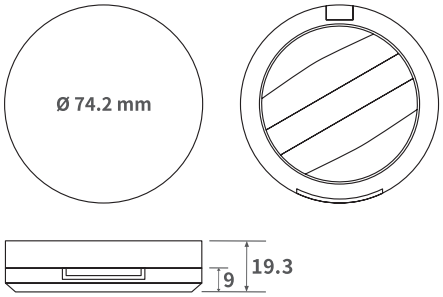

*Dimension:
Ø 74.2 mm x 19.3 mm
(lid 10.3 mm, base 9 mm)
*Inner Ø 60 mm
*Inner depth 4 mm
*Material:
Lid/AS
Base/AS
Insert/AS
*Description:
•Transparent lid and base.
•Insert for 4 eyeshadow + 1 applicator.

CH-360HKTB

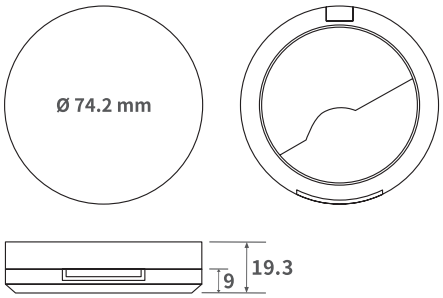

*Dimension:
Ø 74.2 mm x 19.3 mm
(lid 10.3 mm, base 9 mm)
*Inner Ø 60 mm
*Inner depth 4 mm
*Material:
Lid/AS
Base/AS
Insert/AS
*Description:
•Transparent lid and base.
•Insert for 1 blush + 1 brush.

CH-360HK

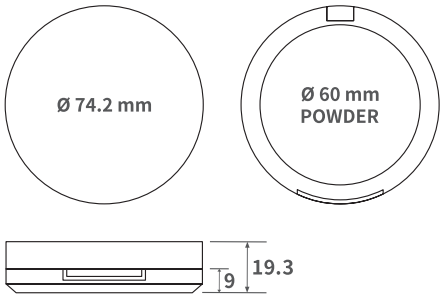

*Dimension:
Ø 74.2 mm x 19.3 mm
(lid 10.3 mm, base 9 mm)
*Inner Ø 60 mm
*Inner depth 5 mm
*Material:
Lid/AS
Base/AS+ABS
*Description:
•Transparent lid.
•Injection color base.
•Inner for 1 powder
or design your own insert.

CH-360HKE

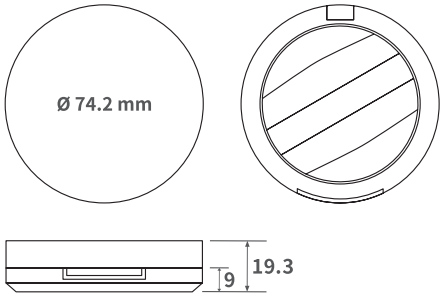

*Dimension:
Ø 74.2 mm x 19.3 mm
(lid 10.3 mm, base 9 mm)
*Inner Ø 60 mm
*Inner depth 4 mm
*Material:
Lid/AS
Base/AS+ABS
Insert/AS+ABS
*Description:
•Transparent lid.
•Injection color base.
•Insert for 4 eyeshadow + 1 applicator.

CH-360HKB

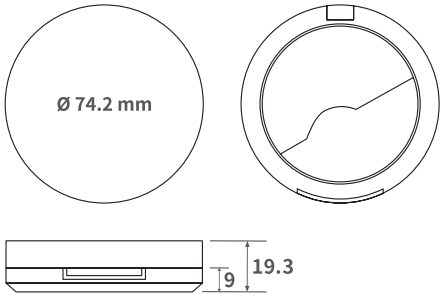

*Dimension:
Ø 74.2 mm x 19.3 mm
(lid 10.3 mm, base 9 mm)
*Inner Ø 60 mm
*Inner depth 4 mm
*Material:
Lid/AS
Base/AS+ABS
Insert/AS+ABS
*Description:
•Transparent lid.
•Injection color base.
•Insert for 1 blush and 1 brush.

CH-360HKM

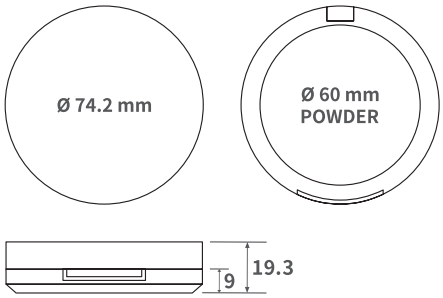

*Dimension:
Ø 74.2 mm x 19.3 mm
(lid 10.3 mm, base 9 mm)
*Inner Ø 60 mm
*Inner depth 5 mm
*Material:
Lid/AS+ABS
Base/AS+ABS
*Description:
•Lid with mirror.
•Inner for 1 powder
or design your own insert.

CH-360HKME

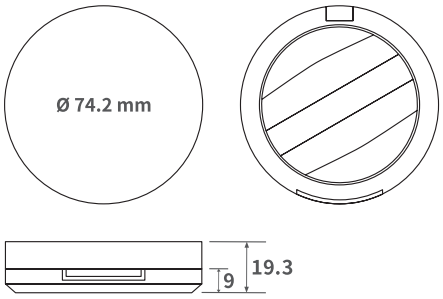

*Dimension:
Ø 74.2 mm x 19.3 mm
(lid 10.3 mm, base 9 mm)
*Inner Ø 60 mm
*Inner depth 4 mm
*Material:
Lid/AS+ABS
Base/AS+ABS
Insert/AS+ABS
*Description:
•Lid with mirror.
•Insert for 4 eyeshadow + 1 applicator.

CH-360HKMB

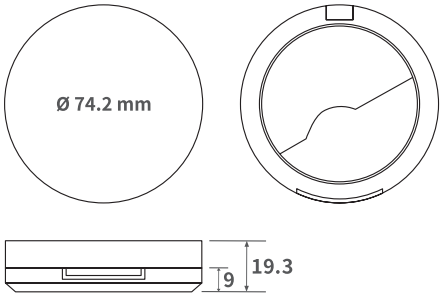

*Dimension:
Ø 74.2 mm x 19.3 mm
(lid 10.3 mm, base 9 mm)
*Inner Ø 60 mm
*Inner depth 4 mm
*Material:
Lid/AS+ABS
Base/AS+ABS
Insert/AS+ABS
*Description:
•Lid with mirror.
•Insert for 1 blush and 1 brush.

CH-359

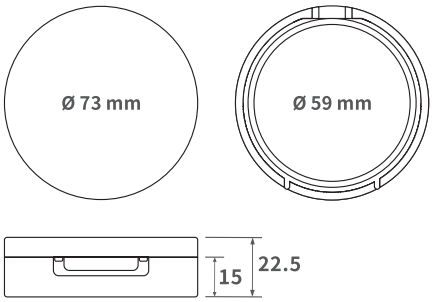

*Dimension:
Ø 73 mm x 22.5 mm
(lid 7.5 mm, base 15 mm)
*Inner Ø 59 mm
*Inner depth 5 mm
*Material:
Lid/AS+ABS
Inner/AS+ABS
Base/AS+ABS
*Description:
•Lid with mirror.
•Inner for powder.
•Base for puff.

CH-359W

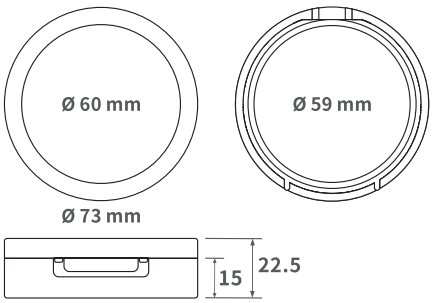

*Dimension:
Ø 73 mm x 22.5 mm
(lid 7.5 mm, base 15 mm)
*Inner Ø 59 mm
*Inner depth 5 mm
*Material:
Lid/AS+ABS
Window/AS
Inner/AS+ABS
Base/AS+ABS
*Description:
•Lid with window (Ø 60 mm).
•Inner with mirror.
•Inner for powder.
•Base for puff.

CH-4330W / 43305W

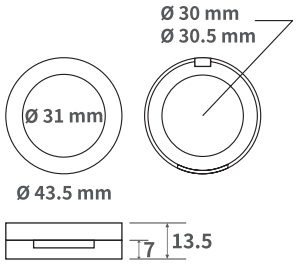

*Dimension:
Ø 43.5 mm x 13.5 mm
(lid 6.5 mm, base 7 mm)
*Inner Ø 30 mm/CH-4330W
Inner Ø 30.5 mm/CH-43305W
*Inner depth 4 mm
*Material:
Lid/AS+ABS
Window/AS
Base/AS+ABS
*Description:
Lid with window (Ø 31 mm).

CH-5036W / 5037W

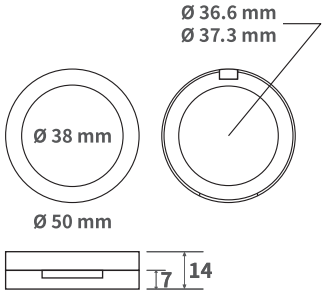

*Dimension:
Ø 50 mm x 14 mm
(lid 7 mm, base 7 mm)
*Inner Ø 36.6 mm/CH-5036W
Inner Ø 37.3 mm/CH-5037W
*Inner depth 4 mm
*Material:
Lid/AS+ABS
Window/AS
Base/AS+ABS
*Description:
Lid with window (Ø 38 mm).

CH-6448W

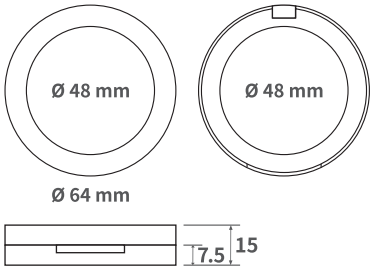

*Dimension:
Ø 64 mm x 15 mm
(lid 7.5 mm, base 7.5 mm)
*Inner Ø 48 mm
*Inner depth 4 mm
*Material:
Lid/AS+ABS
Window/AS
Base/AS+ABS
*Description:
Lid with window (Ø 48 mm).

CH-7459W

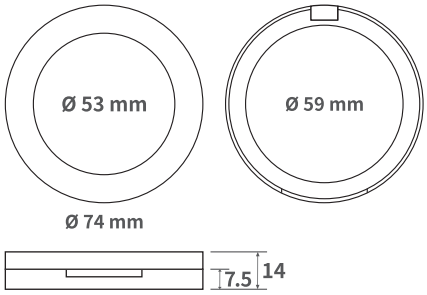

*Dimension:
Ø 74 mm x 14 mm
(lid 6.5 mm, base 7.5 mm)
*Inner Ø 59 mm
*Inner depth 5 mm
*Material:
Lid/AS+ABS
Window/AS
Base/AS+ABS
*Description:
Lid with window (Ø 53 mm).

CH-605TA

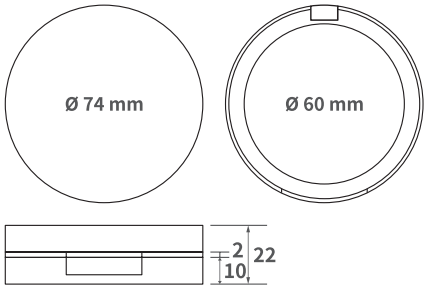

*Dimension:
Ø 74 mm x 22 mm
(lid 10 mm, ring 2 mm, base 10 mm)
*Inner Ø 60 mm
*Inner depth 5 mm
*Material:
Lid/AS
Inner/AS
Base/AS
*Description:
• Transparent lid, inner and base.
• Inner for powder.
• Base for puff.

CH-605T

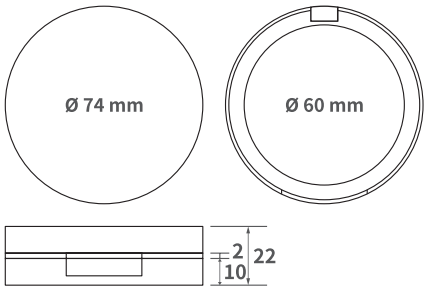

*Dimension:
Ø 74 mm x 22 mm
(lid 10 mm, ring 2 mm, base 10 mm)
*Inner Ø 60 mm
*Inner depth 5 mm
*Material:
Lid/AS
Inner/AS+ABS
Base/AS+ABS
*Description:
• Transparent lid.
• Injection color base and inner.
• Inner for powder.
• Base for puff.

CH-605

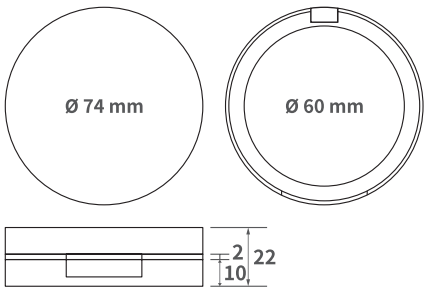

*Dimension:
Ø 74 mm x 22 mm
(lid 10 mm, ring 2 mm, base 10 mm)
*Inner Ø 60 mm
*Inner depth 5 mm
*Material:
Lid/AS+ABS
Inner/AS+ABS
Base/AS+ABS
*Description:
• Lid with mirror.
• Inner for powder.
• Base for puff

CH-605NTA

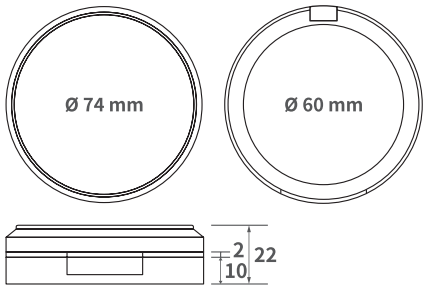

*Dimension:
Ø 74 mm x 22 mm
(lid 10 mm, ring 2 mm, base 10 mm)
*Inner Ø 60 mm
*Inner depth 5 mm
*Material:
Lid/AS
Inner/AS
Base/AS
*Description:
• Transparent lid, inner and base.
• Inner for powder.
• Base for puff.

CH-605NT

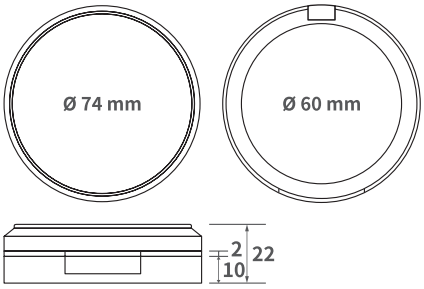

*Dimension:
Ø 74 mm x 22 mm
(lid 10 mm, ring 2 mm, base 10 mm)
*Inner Ø 60 mm
*Inner depth 5 mm
*Material:
Lid/AS
Inner/AS+ABS
Base/AS+ABS
*Description:
• Transparent lid.
• Injection color base and inner.
• Inner for powder.
• Base for puff.

CH-605N

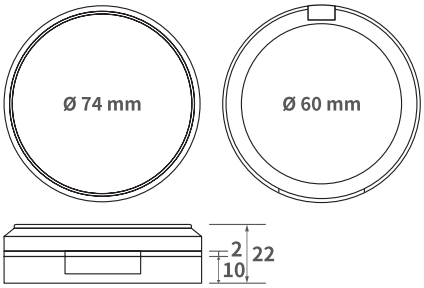

*Dimension:
Ø 74 mm x 22 mm
(lid 10 mm, ring 2 mm, base 10 mm)
*Inner Ø 60 mm
*Inner depth 5 mm
*Material:
Lid/AS+ABS
Inner/AS+ABS
Base/AS+ABS
*Description:
• Lid with mirror.
• Inner for powder.
• Base for puff

CH-605KTA

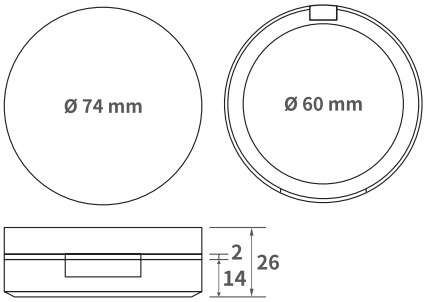

*Dimension:
Ø 74 mm x 26 mm
(lid 10 mm, ring 2 mm, base 14 mm)
*Inner Ø 60 mm
*Inner depth 5 mm
*Material:
Lid/AS
Inner/AS
Base/AS
*Description:
• Transparent lid, inner and base.
• Inner for powder.
• Base for puff.

CH-605KT

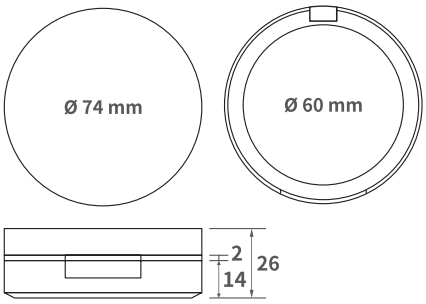

*Dimension:
Ø 74 mm x 26 mm
(lid 10 mm, ring 2 mm, base 14 mm)
*Inner Ø 60 mm
*Inner depth 5 mm
*Material:
Lid/AS
Inner/AS+ABS
Base/AS+ABS
*Description:
• Transparent lid.
• Injection color base and inner.
• Inner for powder.
• Base for puff.

CH-605K

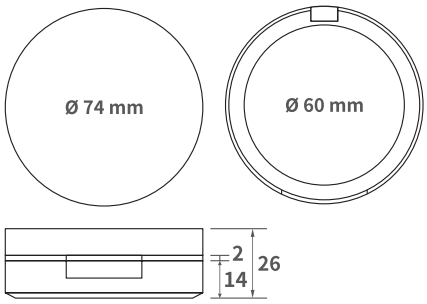

*Dimension:
Ø 74 mm x 26 mm
(lid 10 mm, ring 2 mm, base 14 mm)
*Inner Ø 60 mm
*Inner depth 5 mm
*Material:
Lid/AS+ABS
Inner/AS+ABS
Base/AS+ABS
*Description:
• Lid with mirror.
• Inner for powder.
• Base for puff

CH-605NKTA

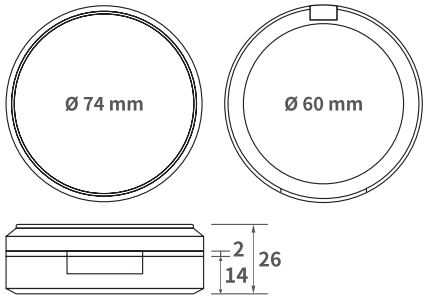

*Dimension:
Ø 74 mm x 26 mm
(lid 10 mm, ring 2 mm, base 14 mm)
*Inner Ø 60 mm
*Inner depth 5 mm
*Material:
Lid/AS
Inner/AS
Base/AS
*Description:
• Transparent lid, inner and base.
• Inner for powder.
• Base for puff.

CH-605NKT

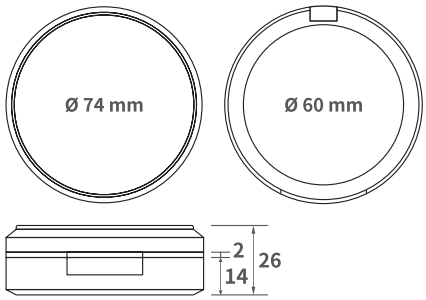

*Dimension:
Ø 74 mm x 26 mm
(lid 10 mm, ring 2 mm, base 14 mm)
*Inner Ø 60 mm
*Inner depth 5 mm
*Material:
Lid/AS
Inner/AS+ABS
Base/AS+ABS
*Description:
• Transparent lid.
• Injection color base and inner.
• Inner for powder.
• Base for puff.

CH-605NK

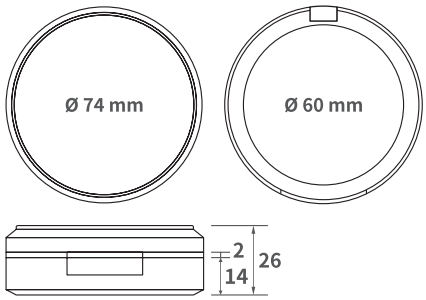

*Dimension:
Ø 74 mm x 26 mm
(lid 10 mm, ring 2 mm, base 14 mm)
*Inner Ø 60 mm
*Inner depth 5 mm
*Material:
Lid/AS+ABS
Inner/AS+ABS
Base/AS+ABS
*Description:
• Lid with mirror.
• Inner for powder.
• Base for puff

CH-021 / AIR CUSHION

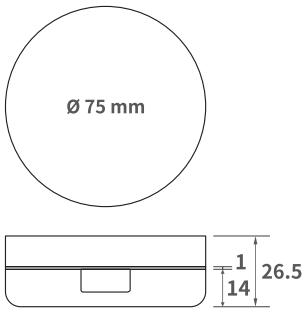

*Dimension:
Ø 75 mm x 26.5 mm
(lid 11.5 mm, ring 1 mm, base 14 mm)
*Material:
Lid/AS+ABS
Inner/AS+ABS
Base/AS+ABS
Push button/ABS
*Description:
• Base for locking P.P. inner.

CH-022 / AIR CUSHION

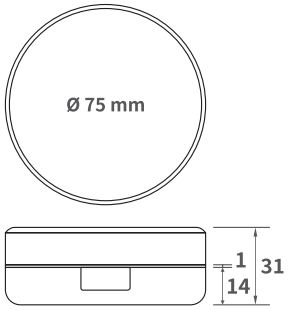

*Dimension:
Ø 75 mm x 31 mm
(lid 16 mm, ring 1 mm, base 14 mm)
*Material:
Top-plate/AS
Lid/AS+ABS
Inner/AS+ABS
Base/AS+ABS
Push button/ABS
*Description:
• Lid with top-plate.
• Base for locking P.P. inner.

CH-021 / 022 P.P. INNER WITH RING

CH-300

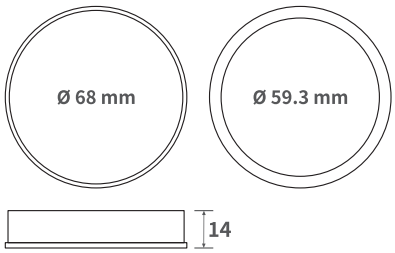

*Dimension:
Ø 68 mm x 14 mm
*Inner Ø 59.3 mm
*Inner depth 5 mm
*Material:
Lid/AS
Base/AS+ABS

CH-304

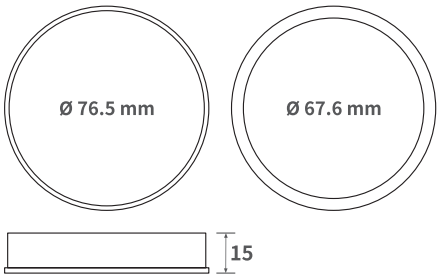

*Dimension:
Ø 76.5 mm x 15 mm
*Inner Ø 67.6 mm
*Inner depth 8 mm
*Material:
Lid/PS
Base/PS

CH-902PT

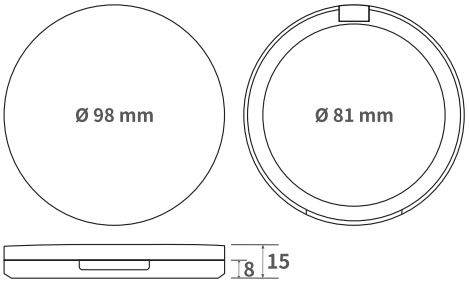

*Dimension:
Ø 98 mm x 15 mm
(lid 7 mm, base 8 mm)
*Inner Ø 81 mm
*Inner depth 5 mm
*Material:
Lid/AS
Base/AS
*Description:
Transparent lid and base.

CH-902P

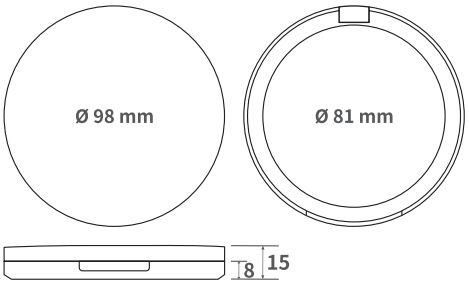

*Dimension:
Ø 98 mm x 15 mm
(lid 7 mm, base 8 mm)
*Inner Ø 81 mm
*Inner depth 5 mm
*Material:
Lid/AS
Base/AS+ABS
*Description:
•Transparent lid.
•Injection color base.

CH-902PM

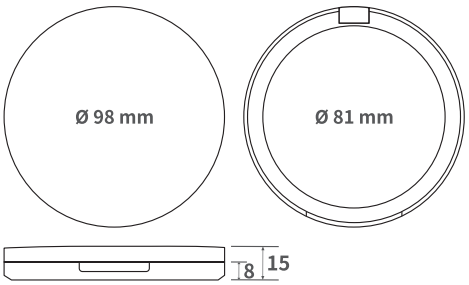

*Dimension:
Ø 98 mm x 15 mm
(lid 7 mm, base 8 mm)
*Inner Ø 81 mm
*Inner depth 5 mm
*Material:
Lid/AS+ABS
Base/AS+ABS
*Description:
Lid with mirror.

CH-010

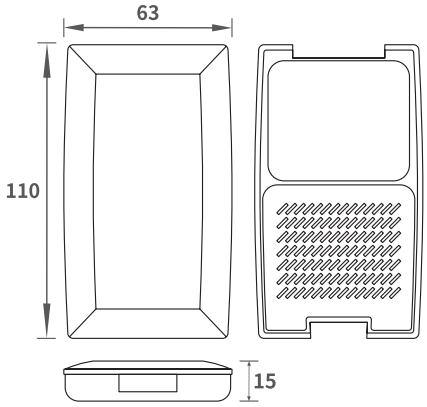

*Dimension:
63 mm x 110 mm x 15 mm
(lid 5 mm, base 10 mm)
*Material:
Lid/AS+ABS
Base/AS+ABS
Push button/ABS
*Description:
• Lid with mirror.
• Base for 1 powder + 1 puff.

CH-012

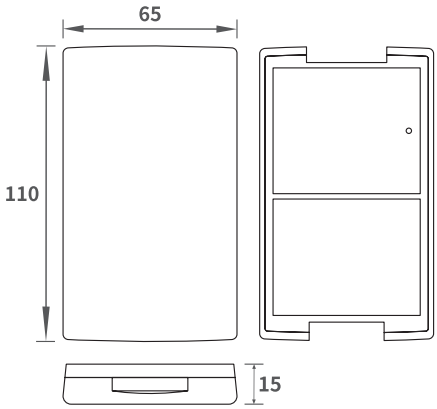

*Dimension:
65 mm x 110 mm x 15 mm
(lid 5 mm, base 10 mm)
*Material:
Lid/AS+ABS
Base/AS+ABS
Push button/ABS
*Description:
• Lid with mirror.
• Base for 1 powder + 1 puff.

CH-013

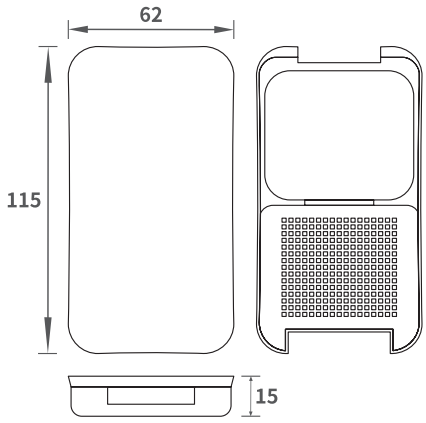

*Dimension:
62 mm x 115 mm x 15 mm
(lid 4 mm, base 11 mm)
*Material:
Lid/AS+ABS
Base/AS+ABS
Push button/ABS
*Description:
• Lid with mirror.
• Base for 1 powder + 1 puff.

CH-015

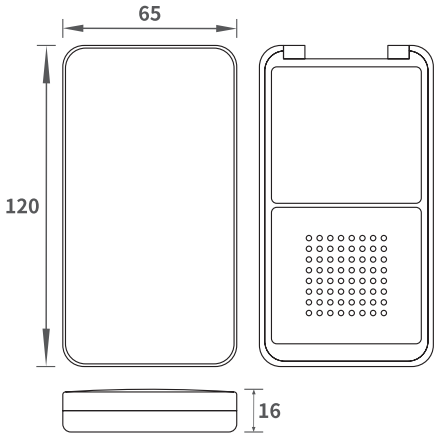

*Dimension:
65 mm x 120 mm x 16 mm
(lid 8 mm, base 8 mm)
*Material:
Top plate/AS
Lid/AS+ABS
Base/AS+ABS
Closure/Magnets
*Description:
• Magnetic closure.
• Lid with mirror.
• Lid with top-plate
• Base for 1 powder + 1 puff.

CH-351TN

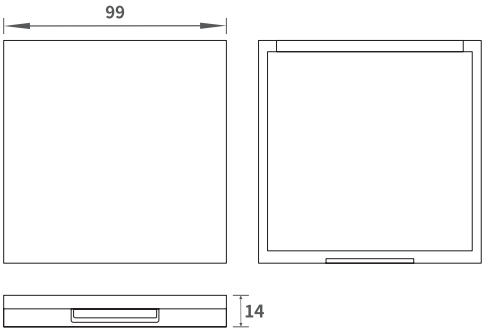

*Dimension:
99 mm x 99 mm x 14 mm
(lid 6 mm, base 8 mm)
*Inner 91 mm x 88.5 mm
*Material:
Lid/AS
Base/AS
*Description:
•Transparent lid and base.
•Base for design your own insert.

CH-351N

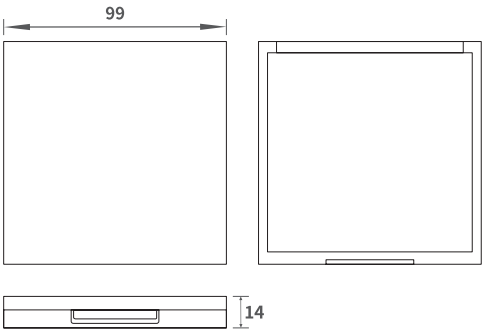

*Dimension:
99 mm x 99 mm x 14 mm
(lid 6 mm, base 8 mm)
*Inner 91 mm x 88.5 mm
*Material:
Lid/AS
Base/AS+ABS
*Description:
•Transparent lid.
•Injection color base.
•Base for design your own insert.

CH-351MN

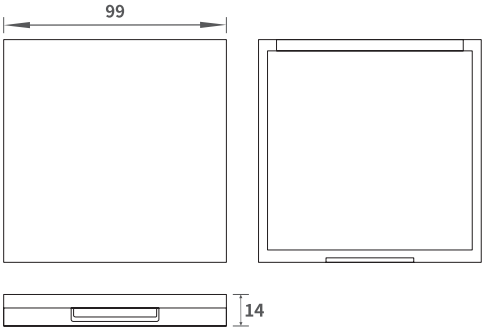

*Dimension:
99 mm x 99 mm x 14 mm
(lid 6 mm, base 8 mm)
*Inner 91 mm x 88.5 mm
*Material:
Lid/AS+ABS
Base/AS+ABS
*Description:
•Lid with mirror.
•Base for design your own insert.

CH-351WN

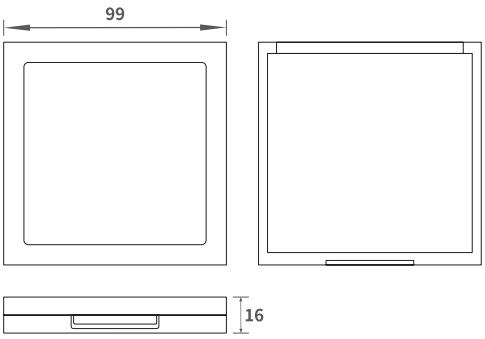

*Dimension:
99 mm x 99 mm x 16 mm
(lid 8 mm, base 8 mm)
*Inner 91 mm x 88.5 mm
*Material:
Lid/AS+ABS
Window/AS
Base/AS+ABS
*Description:
•Lid with window.
•Base for design your own insert.

CH-351WMN

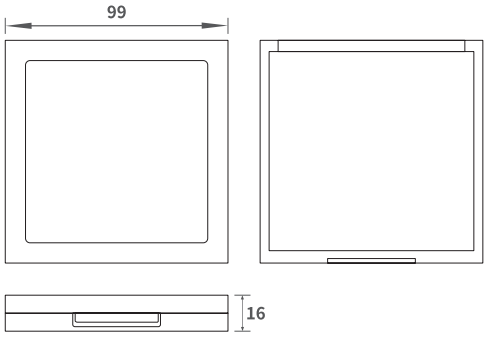

*Dimension:
99 mm x 99 mm x 16 mm
(lid 8 mm, base 8 mm)
*Inner 91 mm x 88.5 mm
*Material:
Lid/AS+ABS
Window/AS+ABS
Base/AS+ABS
*Description:
•Lid with mirror.
•Base for design your own insert.

CH-612T-4

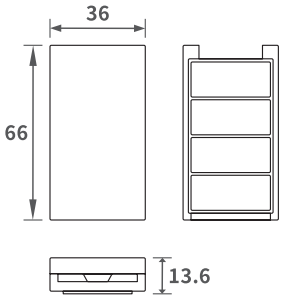

*Dimension:
36 mm x 66 mm x 13.6 mm
(lid 6 mm, base 7.6 mm)
*Inner 56 mm
*Inner depth 4.5 mm
*Material:
Lid/AS
Base/AS
*Description:
•Transparent lid and base.
•Base for 4 colors.

CH-612-4

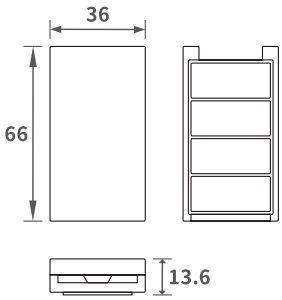

*Dimension:
36 mm x 66 mm x 13.6 mm
(lid 6 mm, base 7.6 mm)
*Inner 56 mm
*Inner depth 4.5 mm
*Material:
Lid/AS+ABS
Base/AS+ABS
*Description:
•Lid without mirror.
•Base for 4 colors.

CH-612M-4

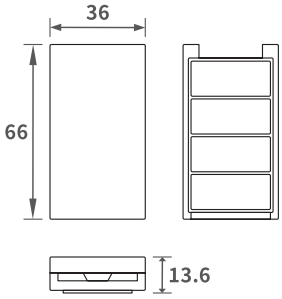

*Dimension:
36 mm x 66 mm x 13.6 mm
(lid 6 mm, base 7.6 mm)
*Inner 56 mm
*Inner depth 4.5 mm
*Material:
Lid/AS+ABS
Base/AS+ABS
*Description:
•Lid with mirror.
•Base for 4 colors.

CH-610T-1

HINGE WITHOUT METAL PIN

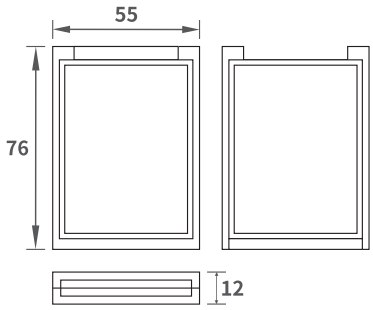

*Dimension:
55 mm x 76 mm x 12 mm
(lid 5 mm, base 7 mm)
*Inner 47 mm x 64 mm
*Material:
Lid/AS
Base/AS
*Description:
• Transparent lid and base.
• Base for 1 powder
or design your own insert.

CH-610T-2

HINGE WITHOUT METAL PIN

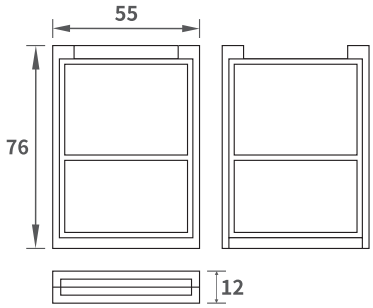

*Dimension:
55 mm x 76 mm x 12 mm
(lid 5 mm, base 7 mm)
*Material:
Lid/AS
Base/AS
*Description:
• Transparent lid and base.
• Base for 1 blush + 1 brush
or design your own insert in blush area.

CH-610T-5

HINGE WITHOUT METAL PIN

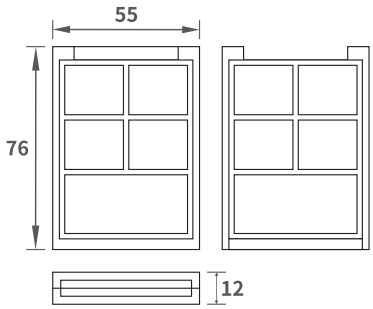

*Dimension:
55 mm x 76 mm x 12 mm
(lid 5 mm, base 7 mm)
*Material:
Lid/AS
Base/AS
*Description:
• Transparent lid and base.
• Base for 4 eyeshadow + 2 applicator.

CH-610-1

HINGE WITHOUT METAL PIN

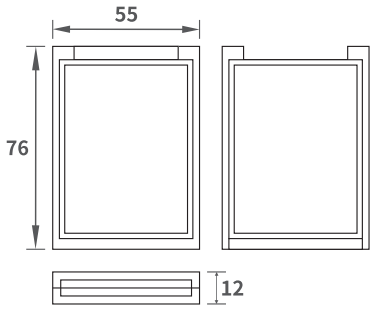

*Dimension:
55 mm x 76 mm x 12 mm
(lid 5 mm, base 7 mm)
*Inner 47 mm x 64 mm
*Material:
Lid/AS
Base/AS+ABS
*Description:
• Transparent lid.
• Injection color base.
• Base for 1 powder
or design your own insert.

CH-610-2

HINGE WITHOUT METAL PIN

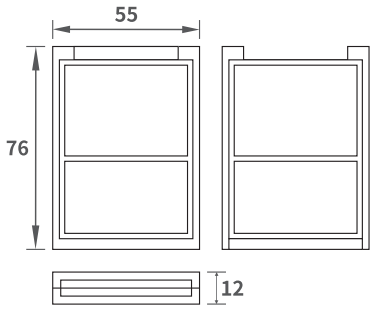

*Dimension:
55 mm x 76 mm x 12 mm
(lid 5 mm, base 7 mm)
*Material:
Lid/AS
Base/AS+ABS
*Description:
• Transparent lid.
• Injection color base.
• Base for 1 blush + 1 brush
or design your own insert in blush area.

CH-610-5

HINGE WITHOUT METAL PIN

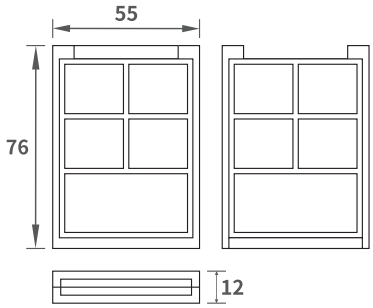

*Dimension:
55 mm x 76 mm x 12 mm
(lid 5 mm, base 7 mm)
*Material:
Lid/AS
Base/AS+ABS
*Description:
• Transparent lid.
• Injection color base.
• Base for 4 eyeshadow + 2 applicator.

CH-610M-1

HINGE WITHOUT METAL PIN

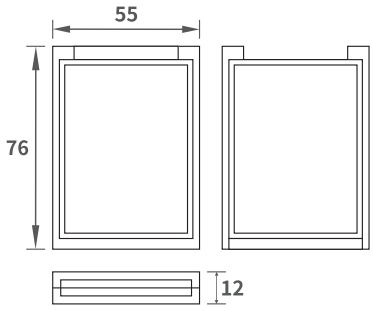

*Dimension:
55 mm x 76 mm x 12 mm
(lid 5 mm, base 7 mm)
*Inner 47 mm x 64 mm
*Material:
Lid/AS+ABS
Base/AS+ABS
*Description:
• Lid with mirror (1.3 mm).
• Base for 1 powder
or design your own insert.

CH-610M-2

HINGE WITHOUT METAL PIN

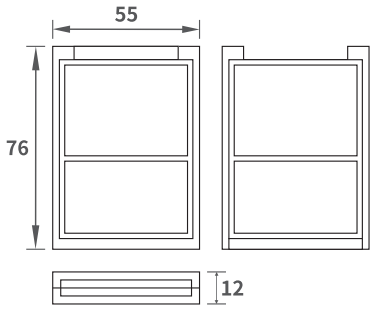

*Dimension:
55 mm x 76 mm x 12 mm
(lid 5 mm, base 7 mm)
*Material:
Lid/AS+ABS
Base/AS+ABS
*Description:
• Lid with mirror (1.3 mm).
• Base for 1 blush + 1 brush
or design your own insert in blush area.

CH-610M-5

HINGE WITHOUT METAL PIN

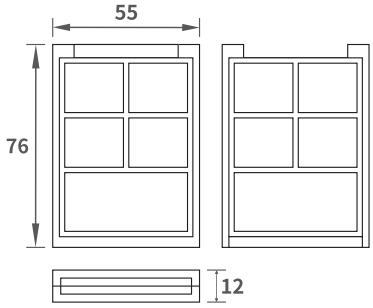

*Dimension:
55 mm x 76 mm x 12 mm
(lid 5 mm, base 7 mm)
*Material:
Lid/AS+ABS
Base/AS+ABS
*Description:
• Lid with mirror (1.3 mm).
• Base for 4 eyeshadow + 2 applicator.

CH-601T-1

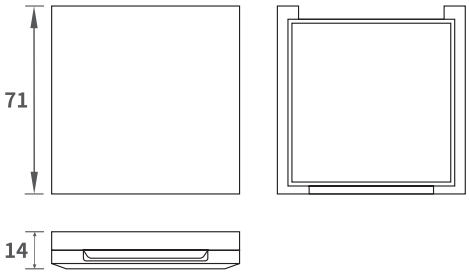

*Dimension:
71 mm x 71 mm x 14 mm
(lid 7 mm, base 7 mm)
*Inner 63 mm x 63 mm
*Material:
Lid/AS
Base/AS
*Description:
• Transparent lid and base.
• Base for 1 powder
or design your own insert.

CH-601-1

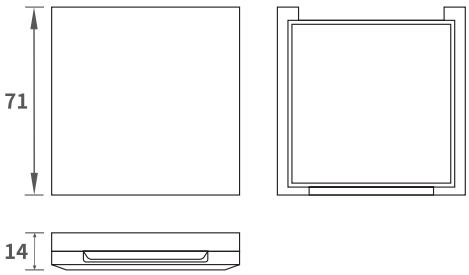

*Dimension:
71 mm x 71 mm x 14 mm
(lid 7 mm, base 7 mm)
*Inner 63 mm x 63 mm
*Material:
Lid/AS
Base/AS+ABS
*Description:
• Transparent lid.
• Injection color base.
• Base for 1 powder
or design your own insert.

CH-601M-1

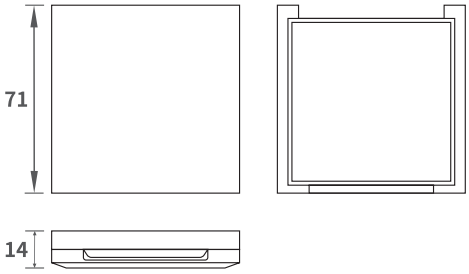

*Dimension:
71 mm x 71 mm x 14 mm
(lid 7 mm, base 7 mm)
*Inner 63 mm x 63 mm
*Material:
Lid/AS+ABS
Base/AS+ABS
*Description:
• Lid with mirror.
• Base for 1 powder
or design your own insert.

CH-601T-4

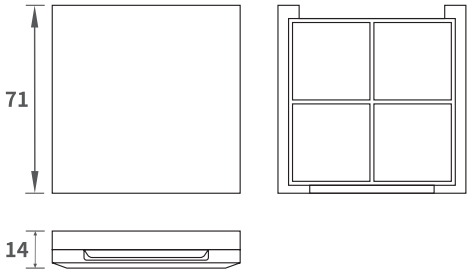

*Dimension:
71 mm x 71 mm x 14 mm
(lid 7 mm, base 7 mm)
*Material:
Lid/AS
Base/AS
*Description:
•Transparent lid and base.
•Base for 4 colors.

CH-601-4

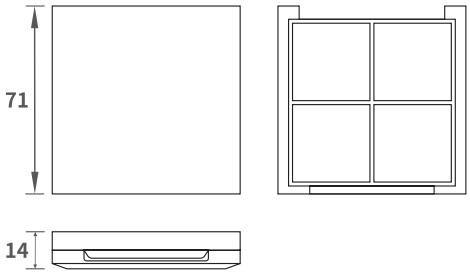

*Dimension:
71 mm x 71 mm x 14 mm
(lid 7 mm, base 7 mm)
*Material:
Lid/AS
Base/AS+ABS
*Description:
•Transparent lid.
•Injection color base.
•Base for 4 colors.

CH-601M-4

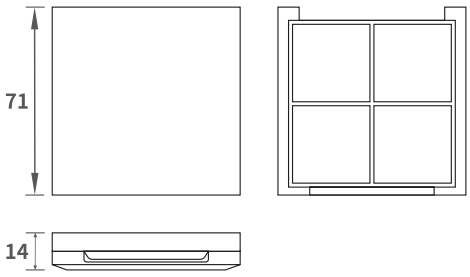

*Dimension:
71 mm x 71 mm x 14 mm
(lid 7 mm, base 7 mm)
*Material:
Lid/AS+ABS
Base/AS+ABS
*Description:
•Lid with mirror.
•Base for 4 colors.

CH-601T-9

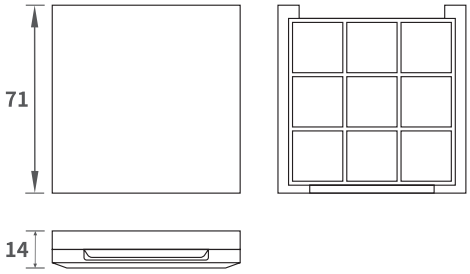

*Dimension:
71 mm x 71 mm x 14 mm
(lid 7 mm, base 7 mm)
*Material:
Lid/AS
Base/AS
*Description:
•Transparent lid and base.
•Base for 9 colors.

CH-601-9

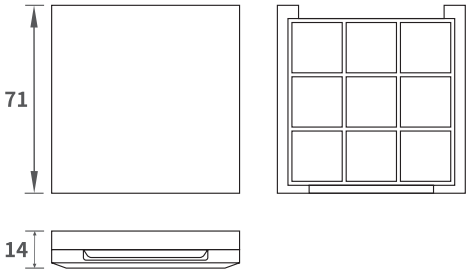

*Dimension:
71 mm x 71 mm x 14 mm
(lid 7 mm, base 7 mm)
*Material:
Lid/AS
Base/AS+ABS
*Description:
• Transparent lid.
• Injection color base.
• Base for 9 colors.

CH-601M-9

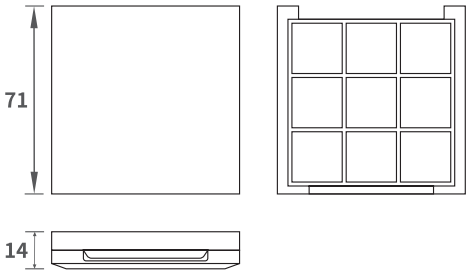

*Dimension:
71 mm x 71 mm x 14 mm
(lid 7 mm, base 7 mm)
*Material:
Lid/AS+ABS
Base/AS+ABS
*Description:
• Lid with mirror.
• Base for 9 colors.